DOLLE®

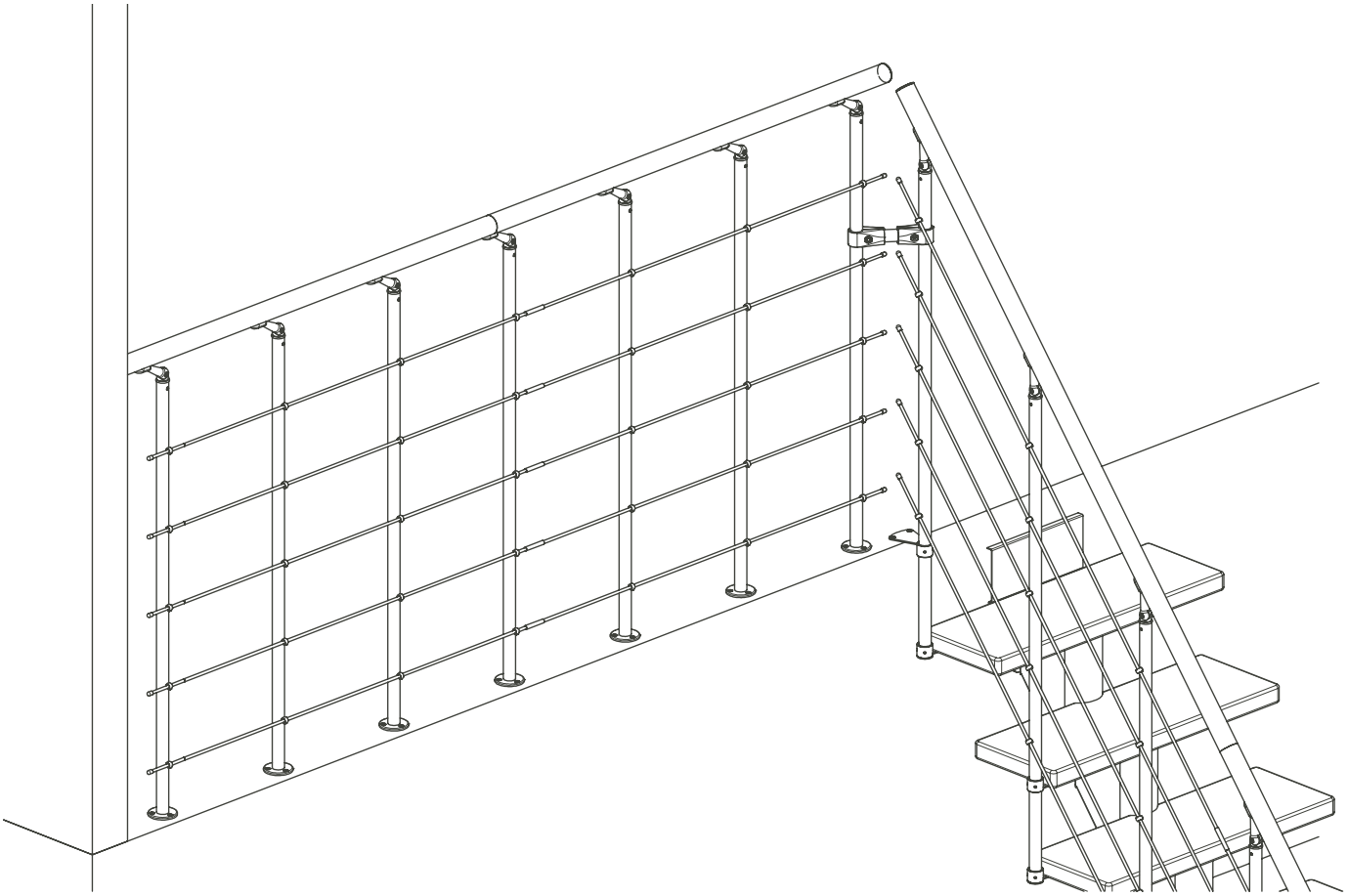

BRÜSTUNGSGELÄNDER

EDELSTAHL

INSTRUCTION / MONTAGEANLEITUNG
INSTRUKTION / INSTRUCCIÒN / INSTRUKCJA

SOGEM®
PART OF DOLLE GROUP

© DOLLE A/S | In the interest of technical progress we reserve the right to make changes | R1-96870 | 18/05/22

Start kit / Corner kit
Anfangspaket / Eckenpaket
Startpakket / Hoekset
Kit de départ / Kit d'angle
Startpakke / Hjørnepakke

8

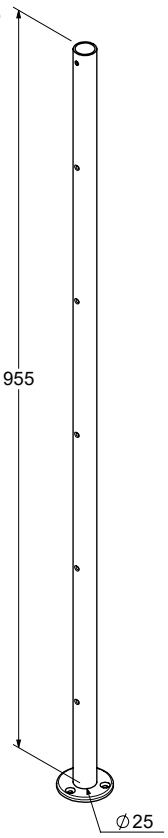

x 4
K2-1077625 *RAL 7016*
K2-1077626 *RAL 9005*
K2-1077627 *Pearl grey*
K2-1077628 *RAL 9016*

27

x 1
K1-1077150 *RAL 7016*
K1-1077151 *RAL 9005*
K1-1077152 *Pearl grey*
K1-1077153 *RAL 9016*

28

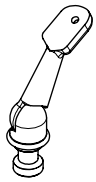

x 4
K2-1077195 *RAL 7016*
K2-1077196 *RAL 9005*
K2-1077197 *Pearl grey*
K2-1077198 *RAL 9016*

29

x 20
K1-1077202

31

x 10
K1-04050

32

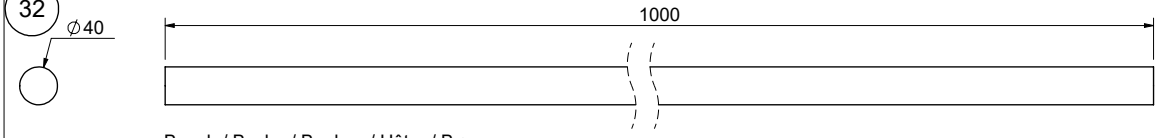

Beech / Buche / Beuken / Hêter / Bøg
Oak / Eiche / Bijv / Chêne / Eg
Oak white / Eiche weiß / Bijv wit / Chêne blanc / Eg hvid

x 1

33

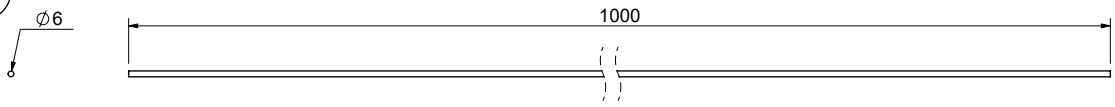

x 5
K1-14070

36

x 1
K2-1077155 *RAL 7016*
K2-1077156 *RAL 9005*
K2-1077157 *Pearl grey*
K2-1077158 *RAL 9016*

37

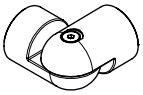

x 1
K2-1077180 *RAL 7016*
K2-1077181 *RAL 9005*
K2-1077182 *Pearl grey*
K2-1077183 *RAL 9016*

38

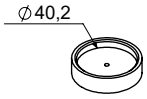

x 1
K1-01620

47

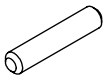

x 2
R3-91415
Ø8 x 40

48

x 12
K3-06027
Ø5 x 50 TX25

49

x 13
K3-08002
Ø8 x 40

50

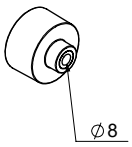

x 1
K1-01810

51

x 4
K3-06008
Ø5 x 25 PZ2

52

x 4
K3-05002
M6 x 8

56

x 1
K3-06290
Ø4,5 x 40 TX20

57

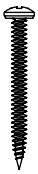

x 1
K3-06286
Ø5 x 50 PZ2

58

x 20
K3-05064
M4 x 4

59

Wood glue
Holzkleber
Colle à bois
Trælim
Houtlijm

x 1
K3-90005

60

Strong glue
Superkleber
Seconde lijm
Colle forte
Superlim

x 1
K3-90001

61

x 1
K3-10226 *RAL 7016*
K3-10405 *RAL 9005*
K3-10226 *FZB/BZP*
Ø5 x 35 TX25

34

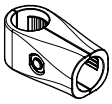

x 2
K2-1077170 *RAL 7016*
K2-1077171 *RAL 9005*
K2-1077172 *Pearl grey*
K2-1077173 *RAL 9016*

35

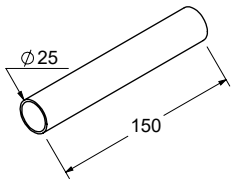

x 1
K1-1077165 *RAL 7016*
K1-1077166 *RAL 9005*
K1-1077167 *Pearl grey*
K1-1077168 *RAL 9016*

Extension kit
Ergänzungspaket

Uitbreidingsset
Kit de suite

Forlængerpakke

8

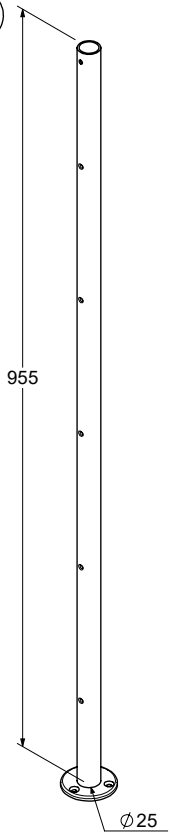

x 3
K2-1077625 *RAL 7016*
K2-1077626 *RAL 9005*
K2-1077627 *Pearl grey*
K2-1077628 *RAL 9016*

28

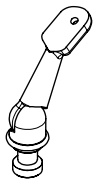

x 3
K2-1077195 *RAL 7016*
K2-1077196 *RAL 9005*
K2-1077197 *Pearl grey*
K2-1077198 *RAL 9016*

29

x 15
K1-1077202

30

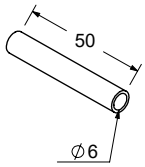

x 5
K1-14939

58

x 15
K3-05064
M4 x 4

32

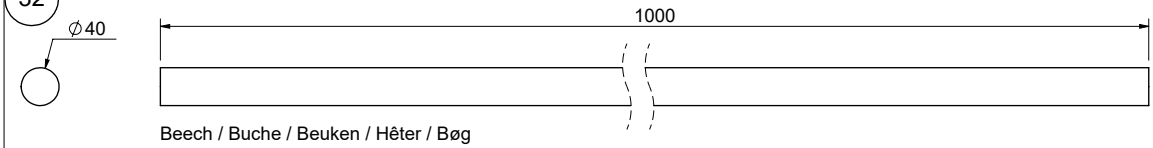

Beech / Buche / Beuken / Hêter / Bøg
Oak / Eiche / Bijv / Chêne / Eg
Oak white / Eiche weiß / Bijv wit / Chêne blanc / Eg hvid

x 1

33

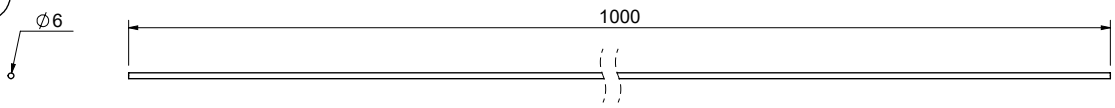

x 5
K1-14070

47

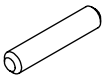

x 1
R3-91415
Ø8 x 40

48

x 9
K3-06027
Ø5 x 50 TX25

49

x 9
K3-08002
Ø8 x 40

51

x 3
K3-06008
Ø5 x 25 PZ2

52

x 3
K3-05002
M6 x 8

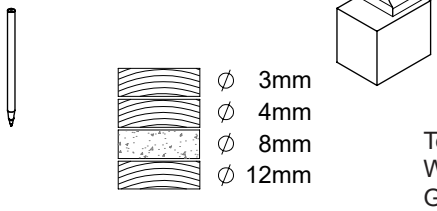

∅ 3mm
∅ 4mm
∅ 8mm
∅ 12mm

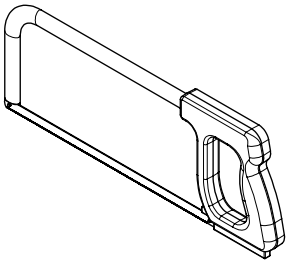

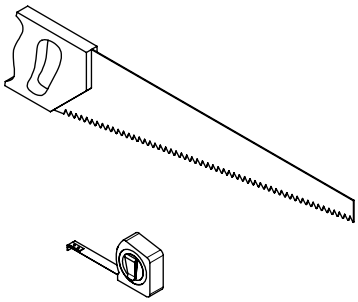

TX22
TX25

2,5 mm
6 mm

Tools not included!
Werkzeuge nicht enthalten!
Gereedschap niet inbegrepen!
Outils non inclus!
Værktøj ikke inkluderet!

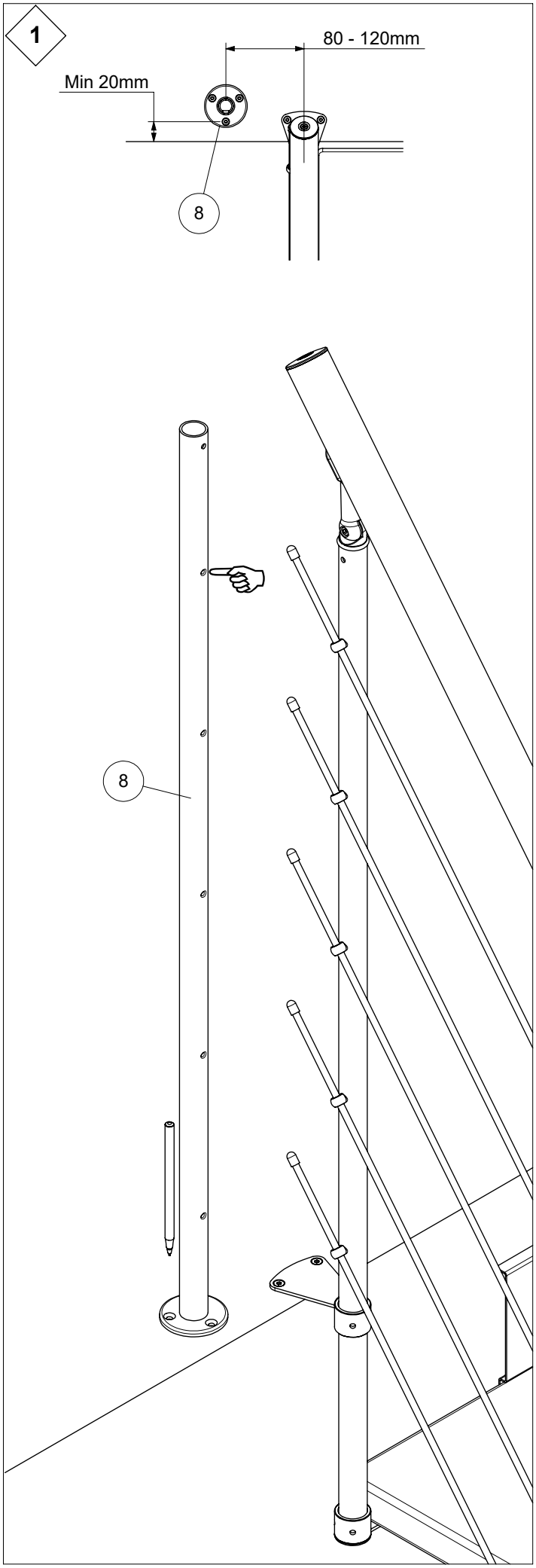
1
80 - 120mm
Min 20mm
8
8

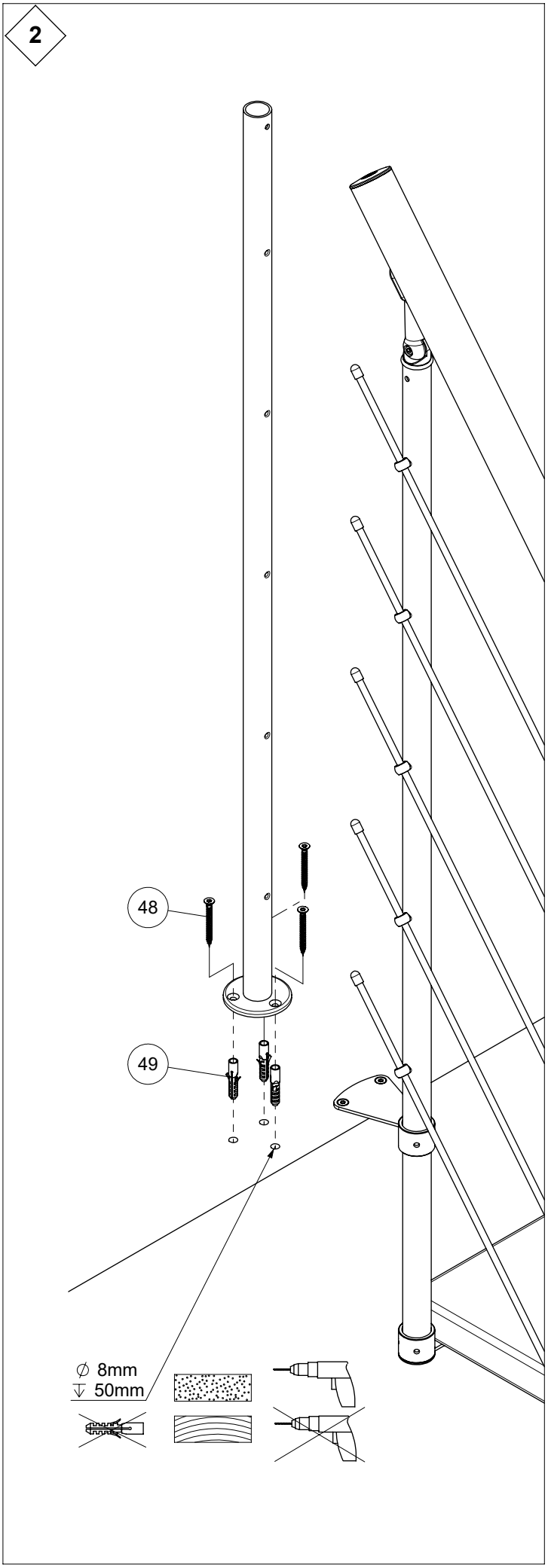
2
48
49
∅ 8mm
50mm

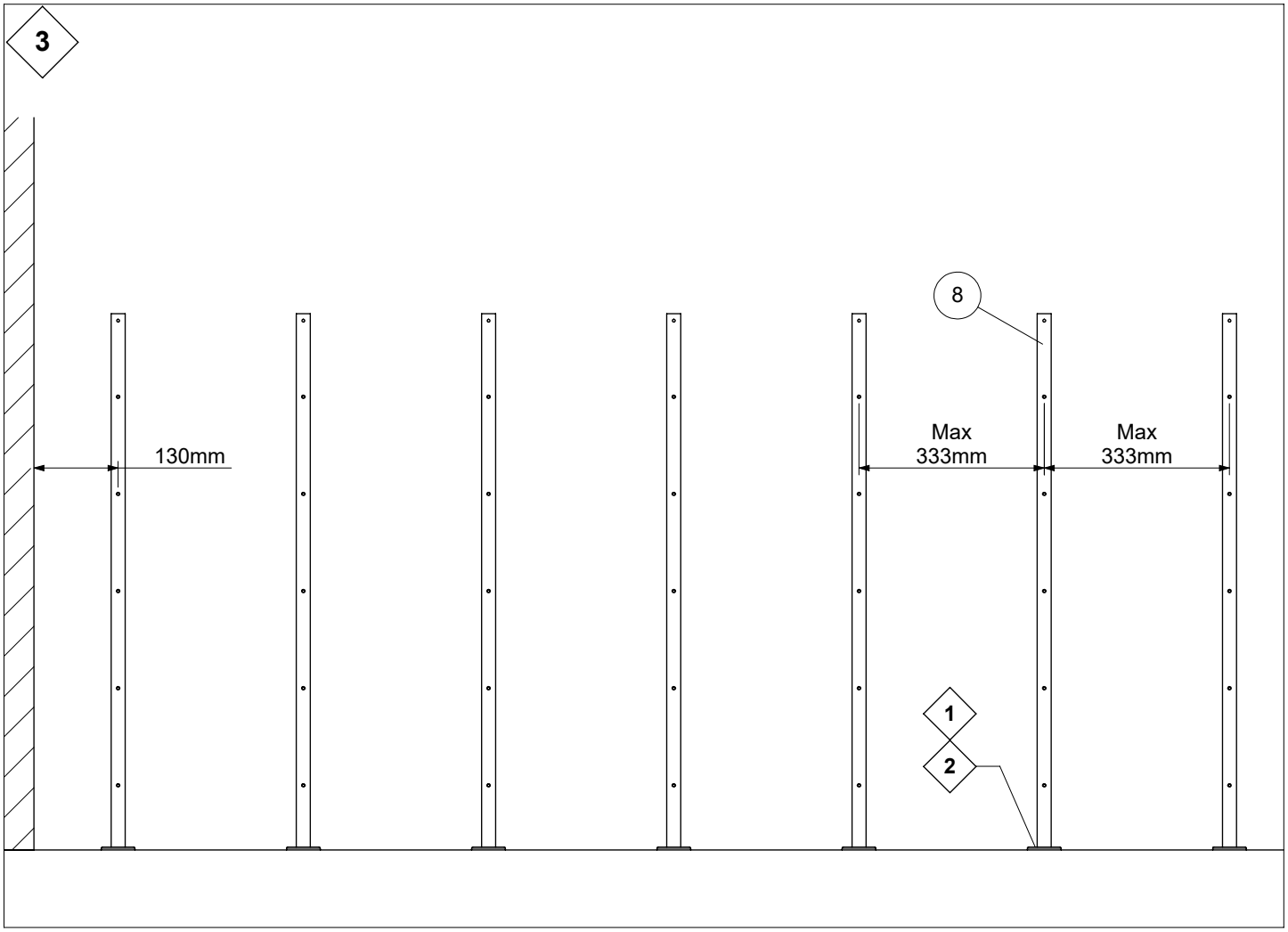
3
8
130mm
Max
333mm
Max
333mm
1
2

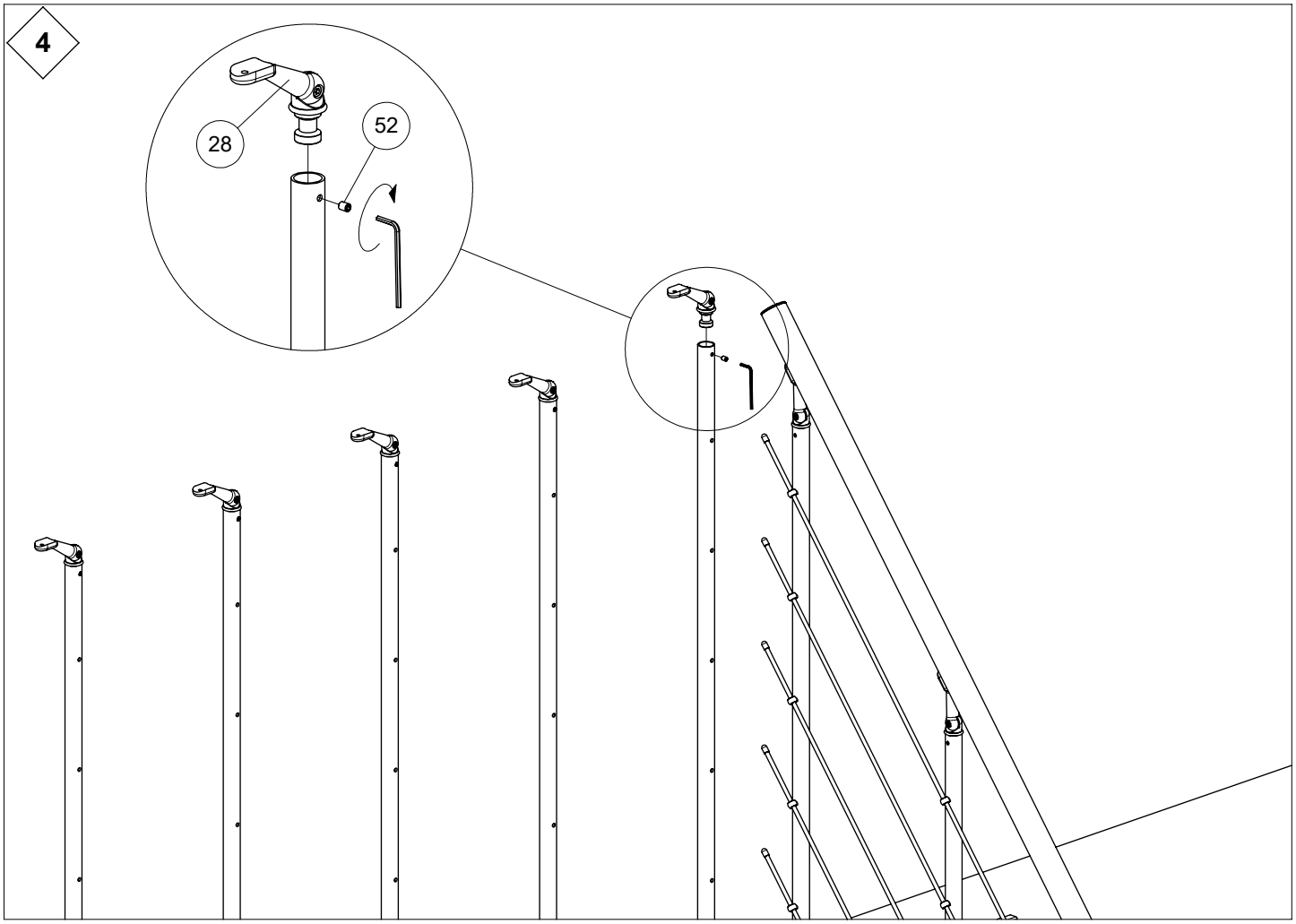
4
28
52

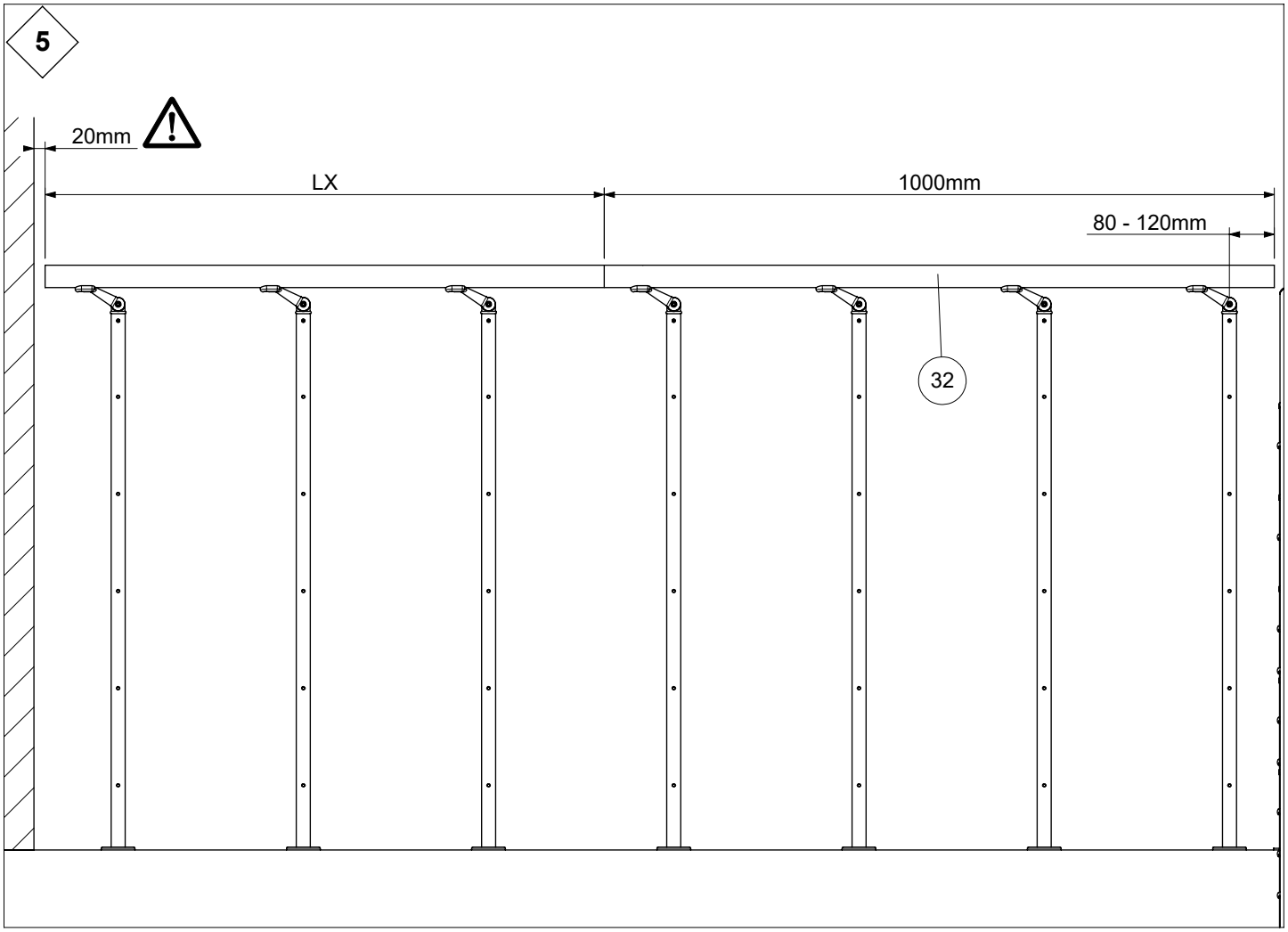
5
20mm
LX
1000mm
80 - 120mm
32

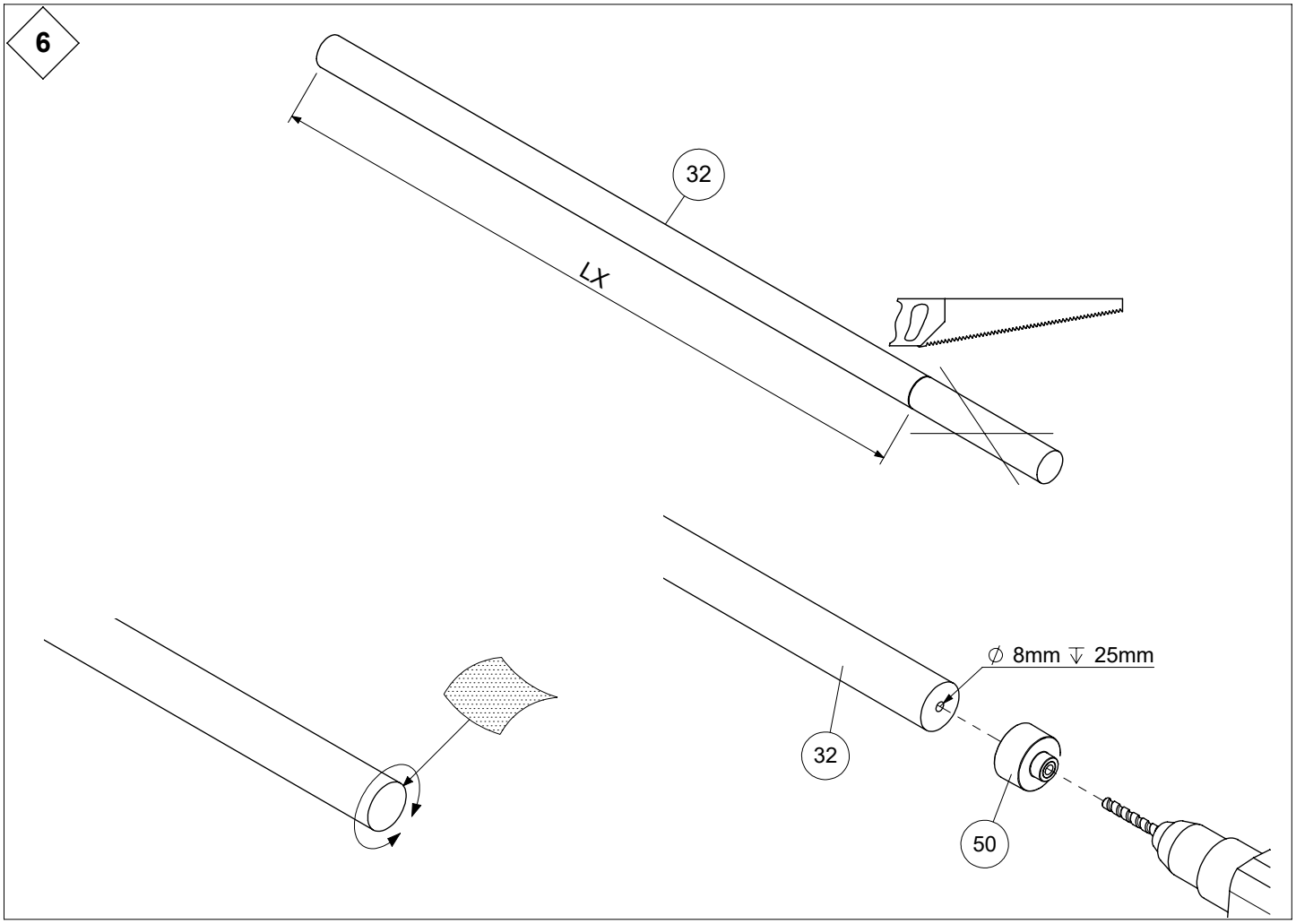
6
32
LX
∅ 8mm ↧ 25mm
32
50

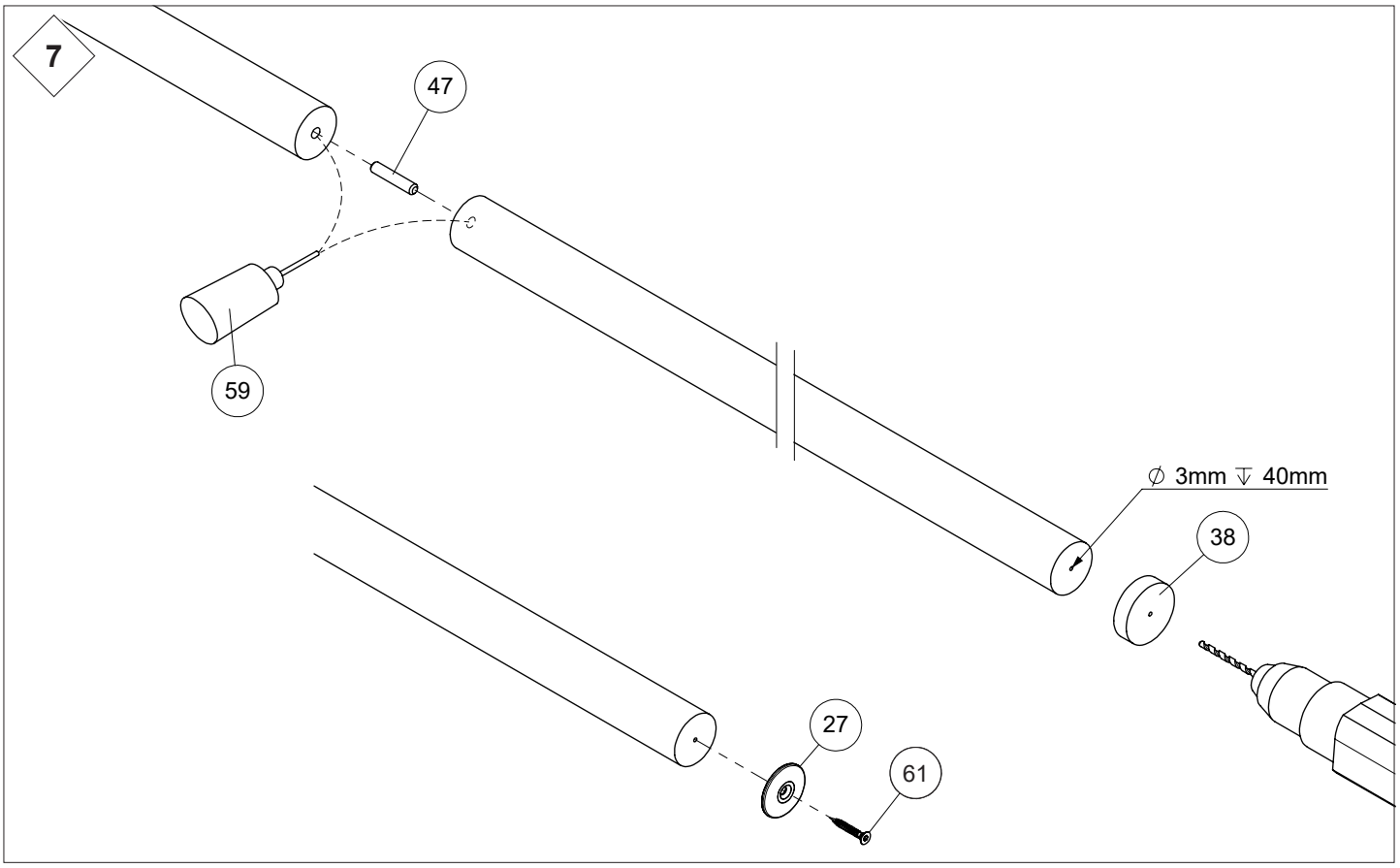
7
47
59
∅ 3mm ↧ 40mm
38
27
61

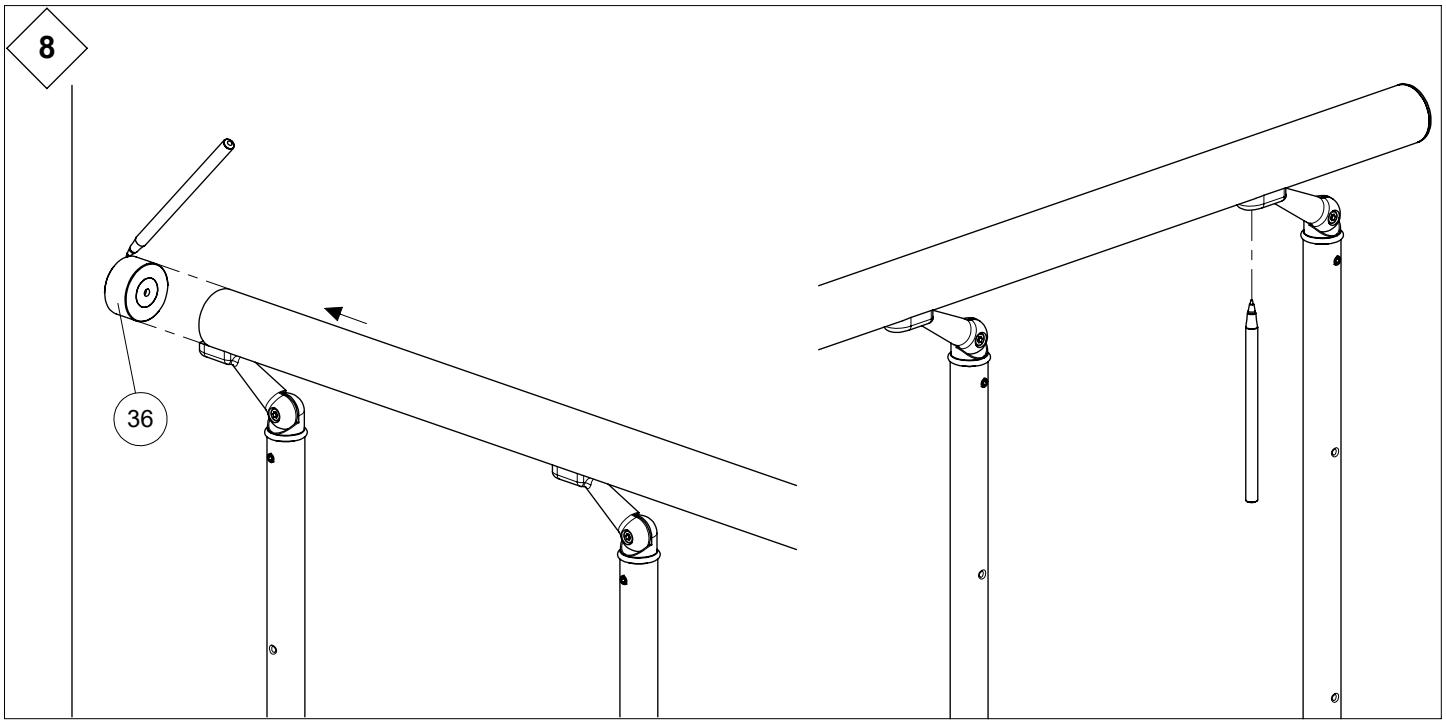
8
36

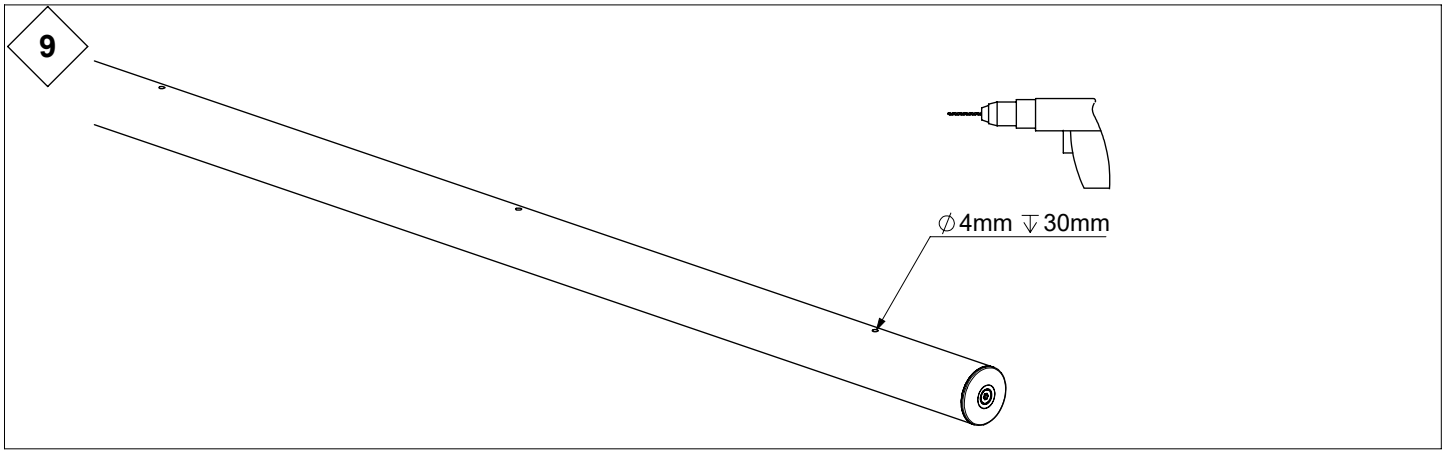
9
∅4mm ↧30mm

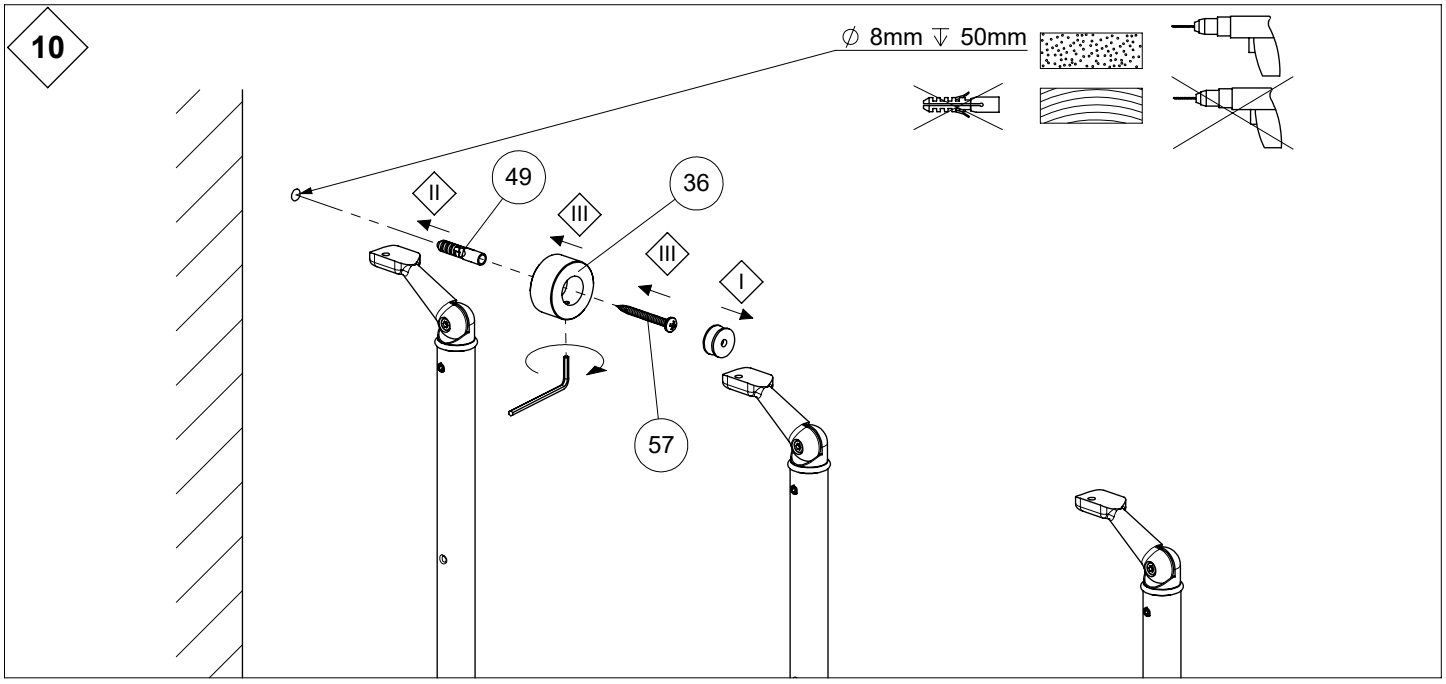
10
∅ 8mm ↧ 50mm
49
36
57
I
II
III
III

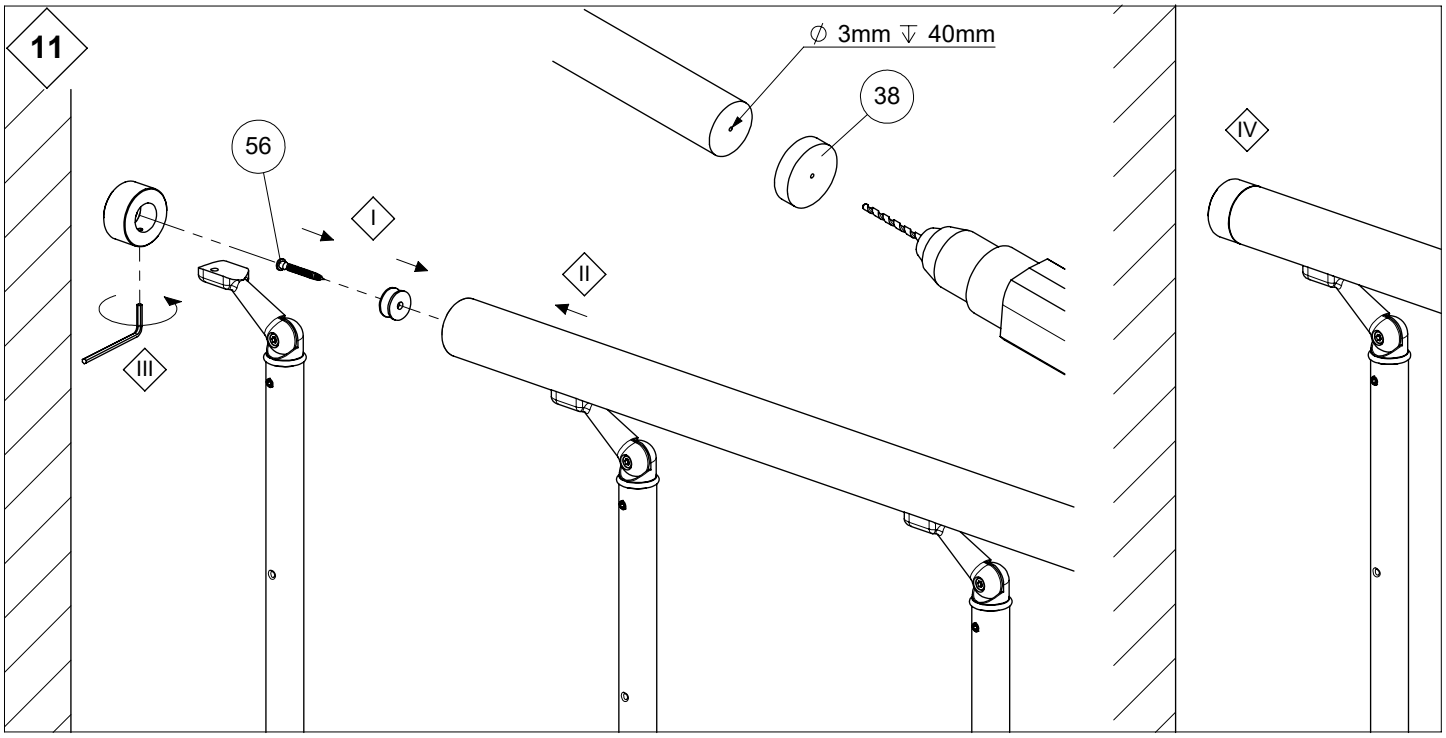
11
∅ 3mm ↧ 40mm
38
56
I
II
III
IV

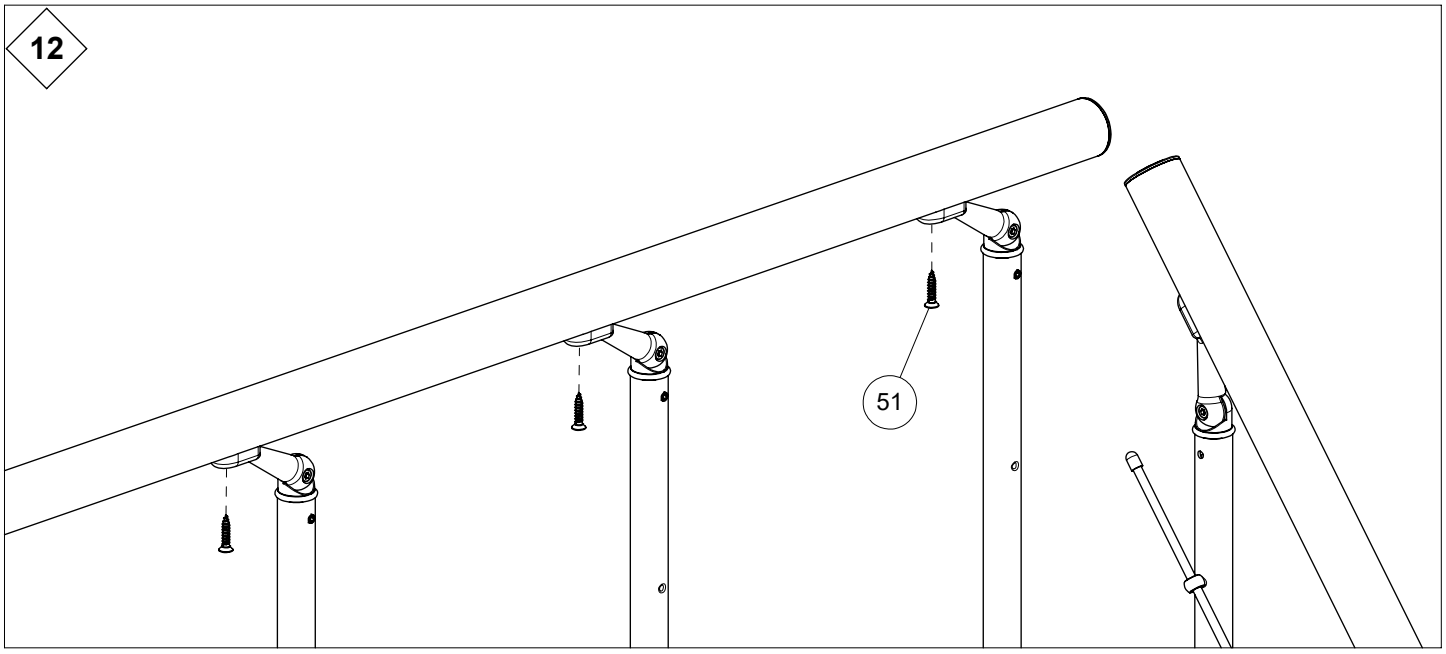
12
51

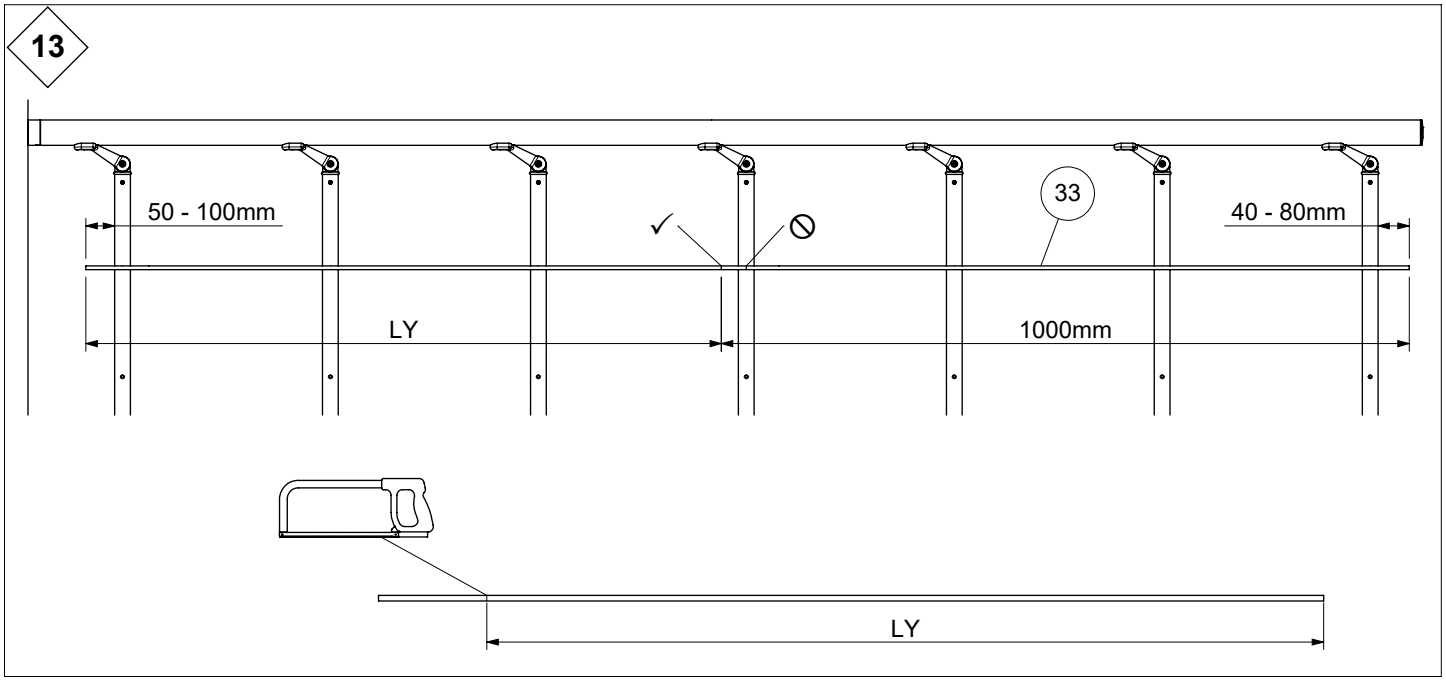
13
50 - 100mm
33
40 - 80mm
LY
1000mm
LY

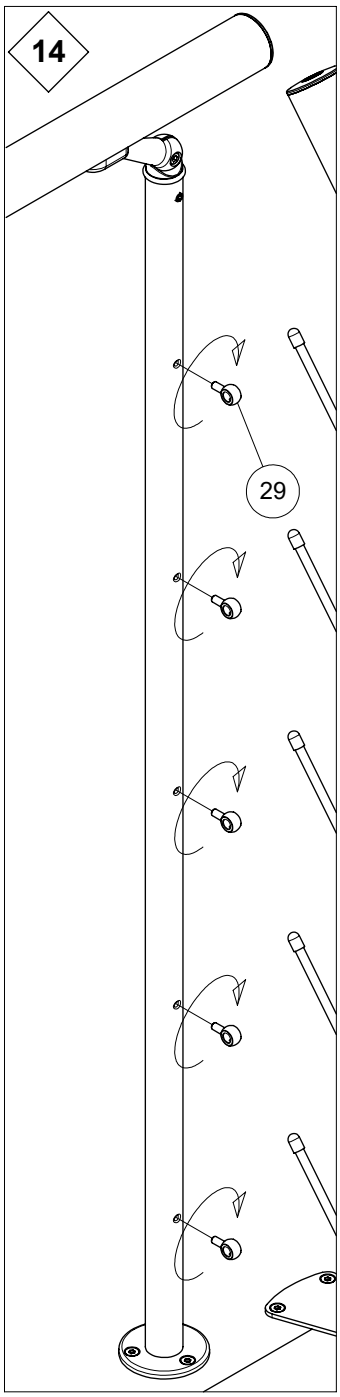
14
29

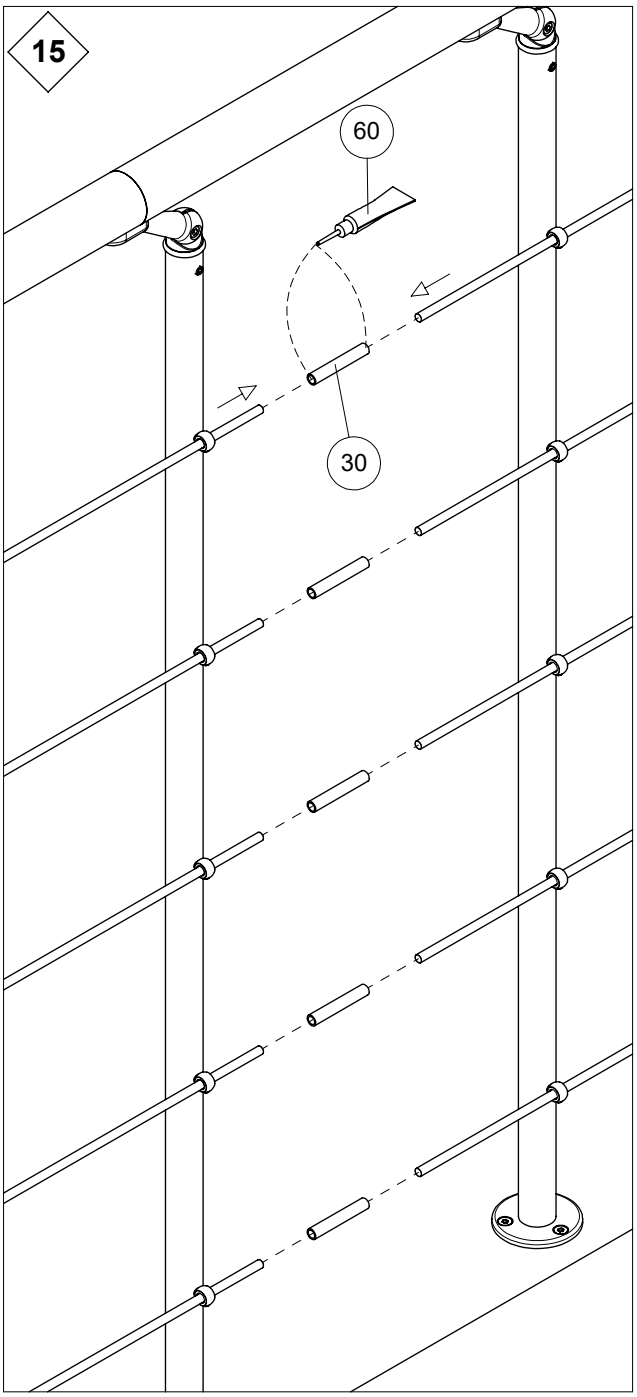
15
60
30

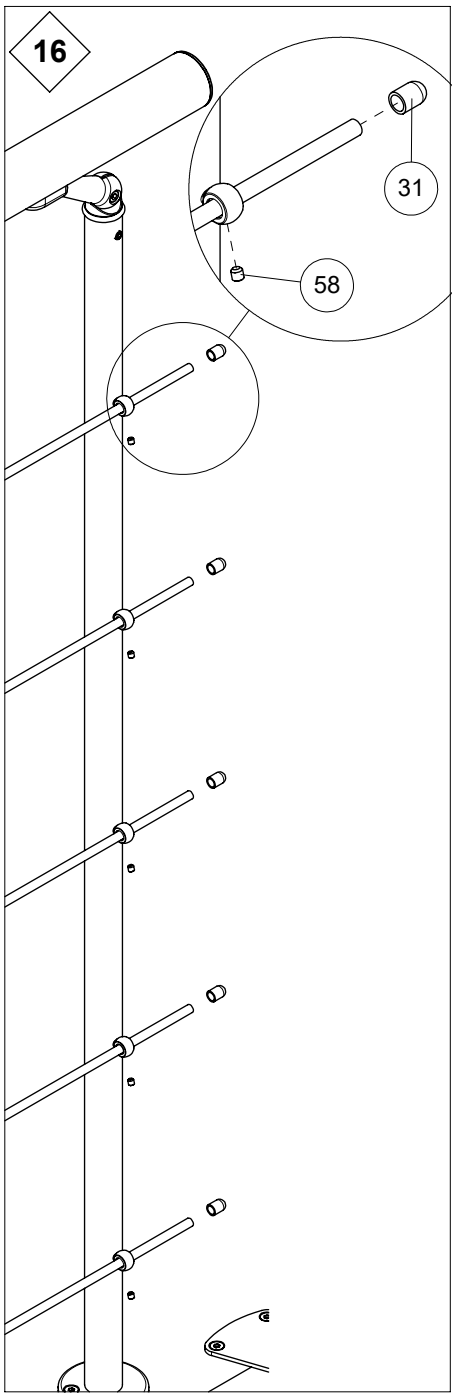
16
31
58

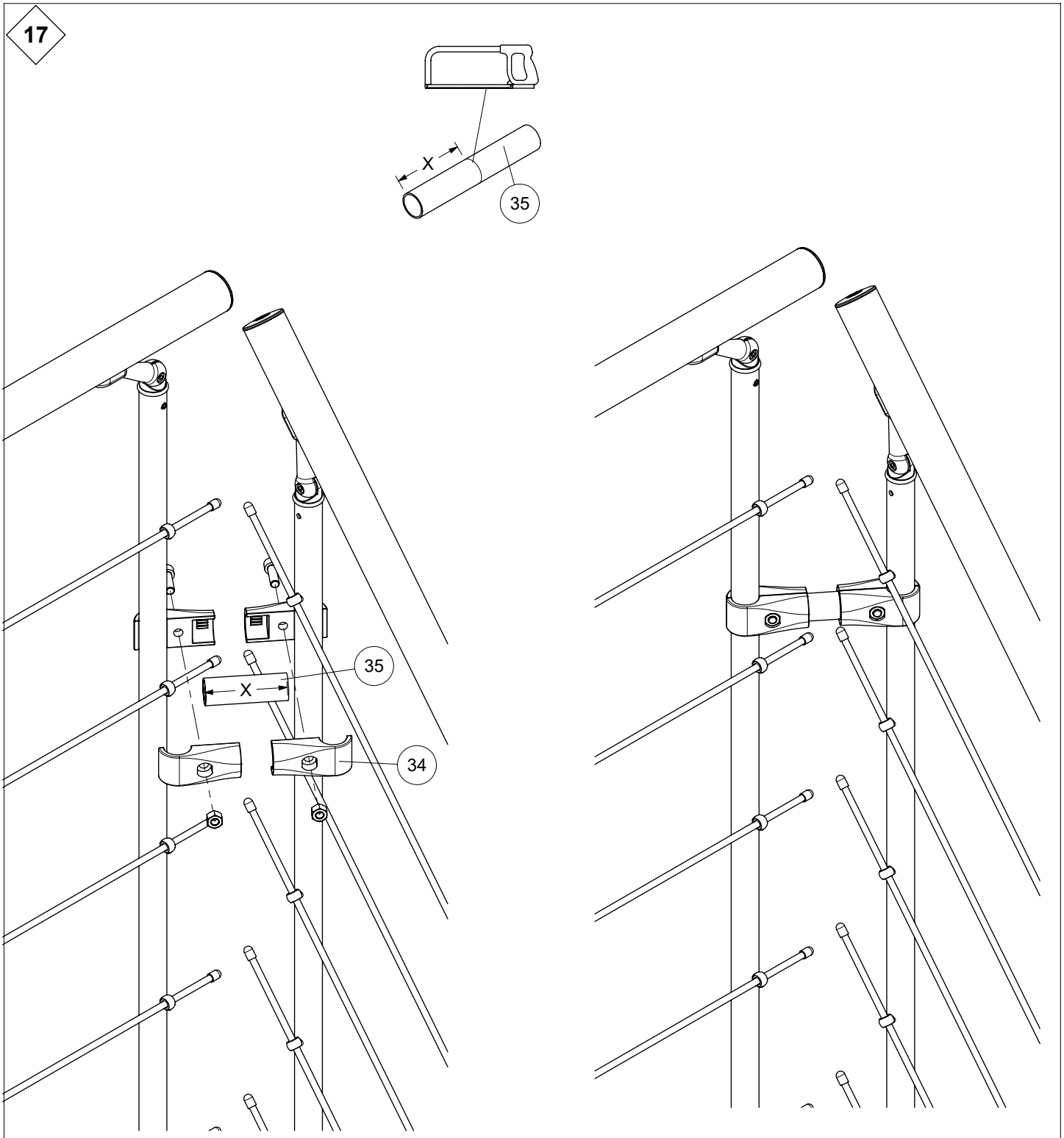
17
X
35
35
X
34

18

Extension kit
Ergänzungspaket
Uitbreidingsset
Kit de suite
Forlængerpakke

Start kit / Corner kit
Anfangspaket / Eckenpaket
Startpakket / Hoekset
Kit de départ / Kit d'angle
Startpakke / Hjørnepakke

8
10
11
6
7
9
17
19
20
1
2
3
4

Max
333mm

8

70 - 90mm

70 - 90mm

Max 333mm

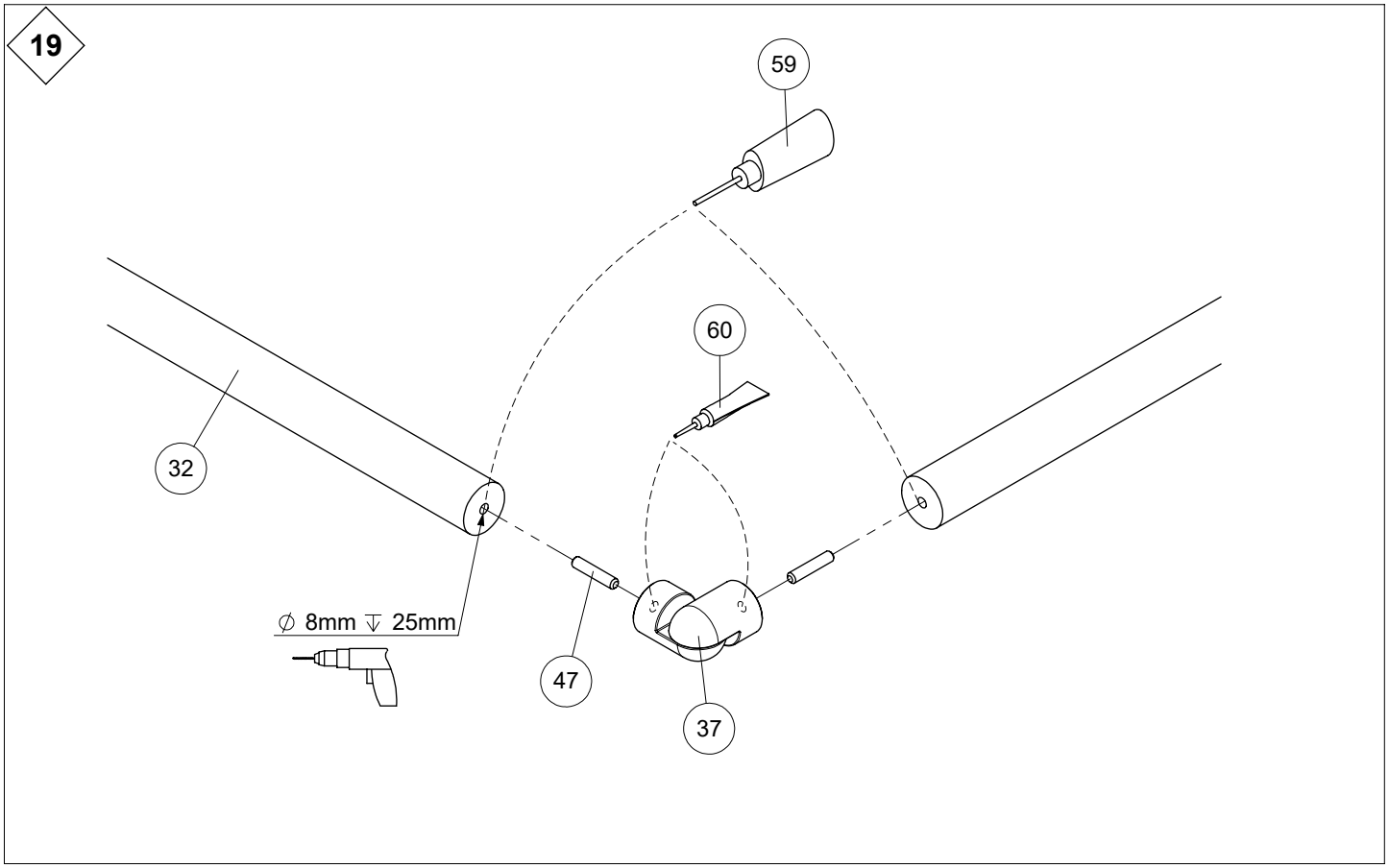
19
59
60
32
∅ 8mm ↧ 25mm
47
37

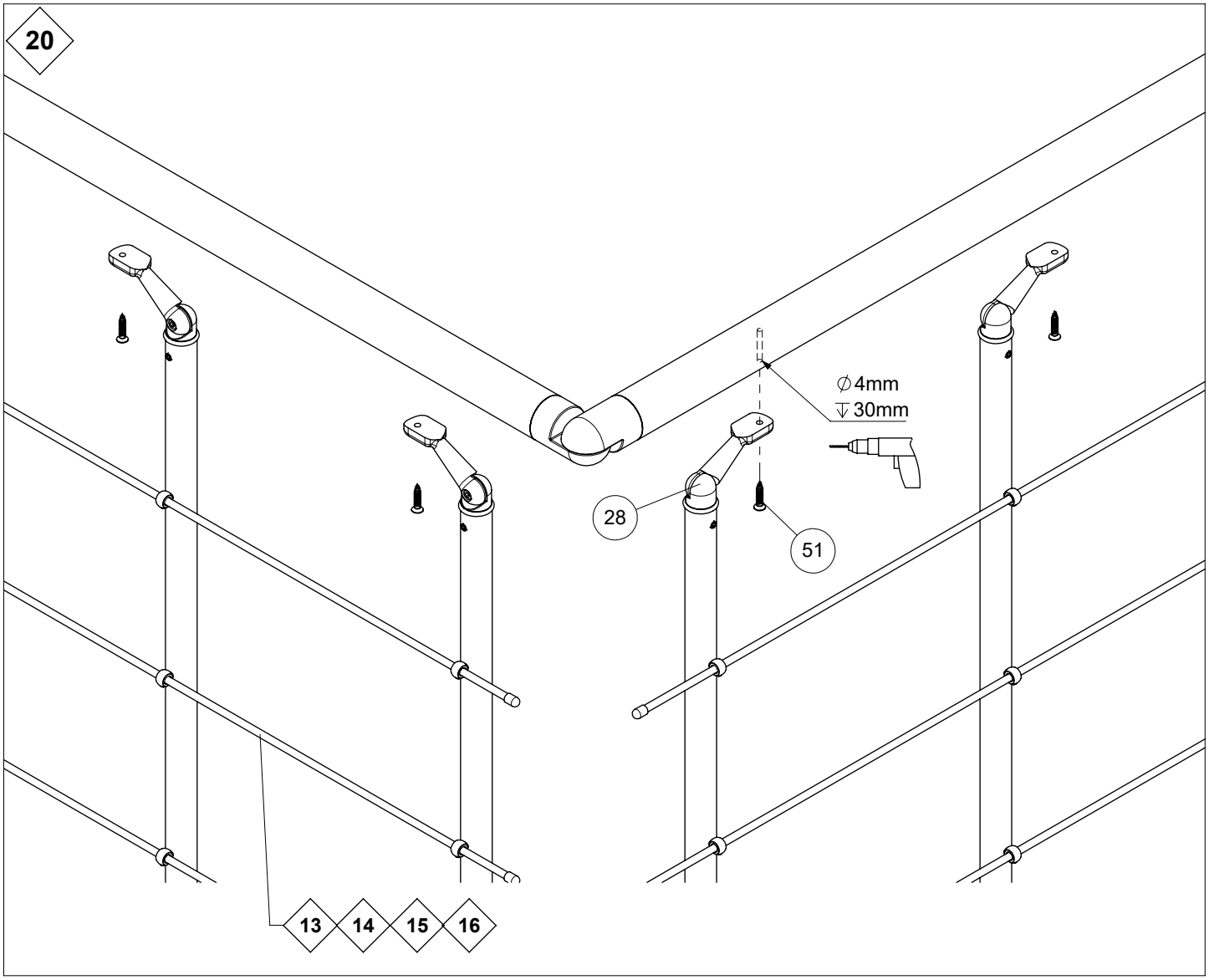
20
∅4mm
↧30mm
28
51
13
14
15
16