MONTRÉAL

Classic

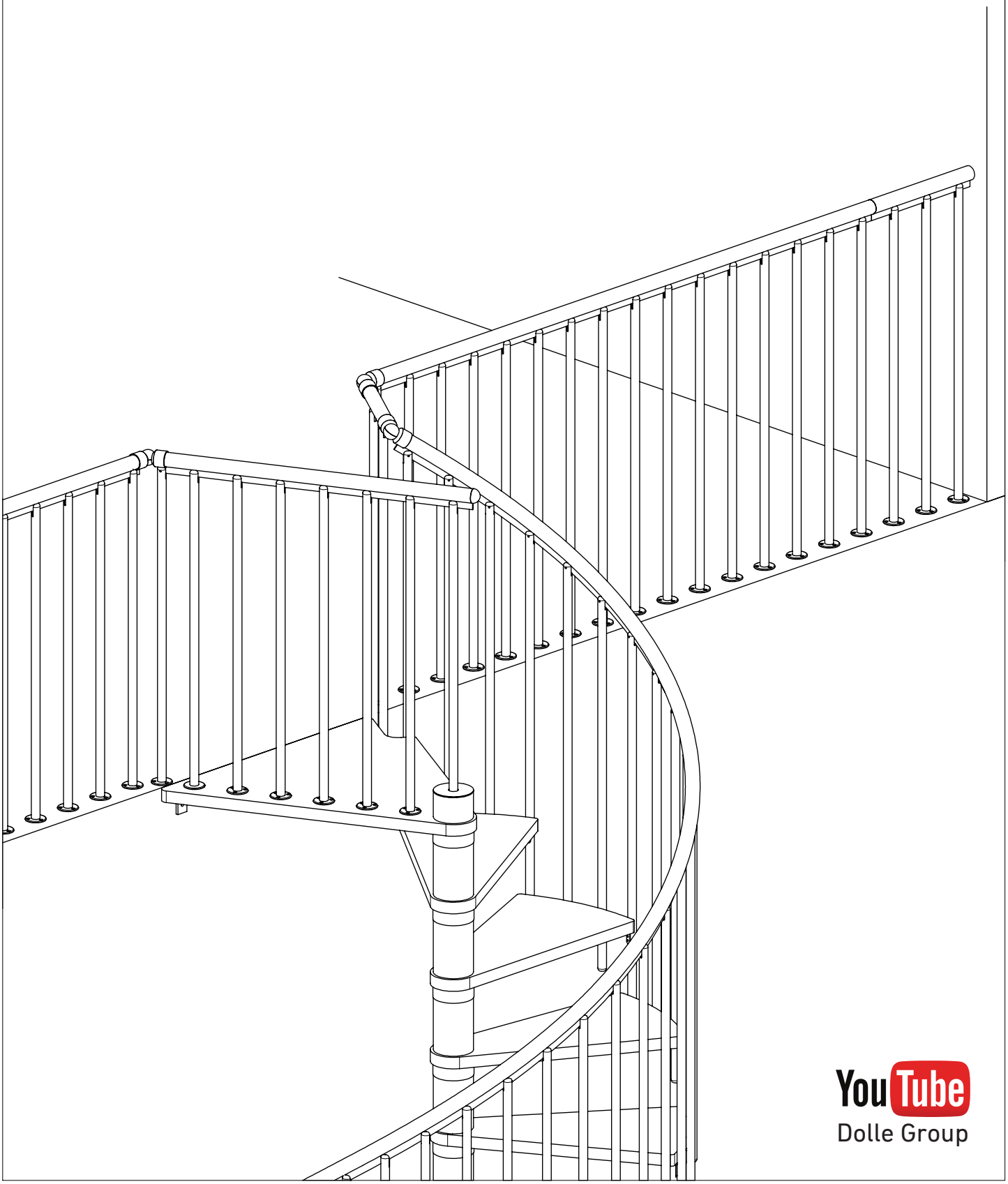

YouTube
Dolle Group

R1-96715 / 15-12-2016 / Rev. 19-03-2018

Start kit / Extension kit
Kit de départ / Kit de suite

Startpaket / Extrapaket
Startpakke / Forlængerpakke

9

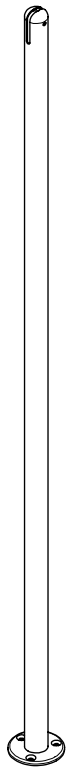

K2-71250 *RAL 9006*
K2-71450 *RAL 7016*
K2-71650 *RAL 9016*

25

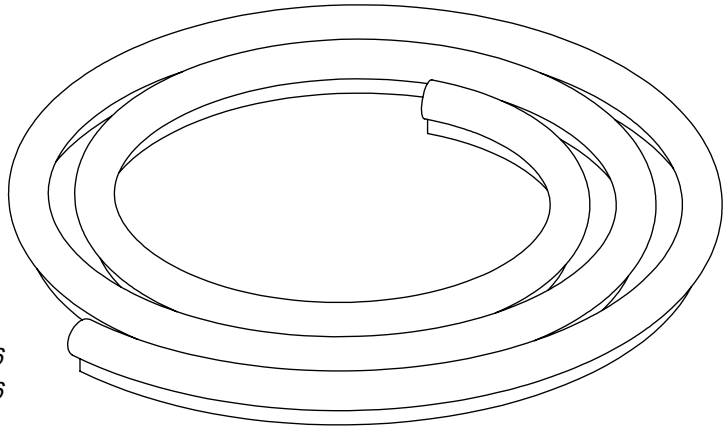

K1-71295 *5000mm [196 7/8"] - RAL 9006*
K1-71495 *5000mm [196 7/8"] - RAL 7016*
K1-71695 *2000mm [78 3/4"] - RAL 9016*

26

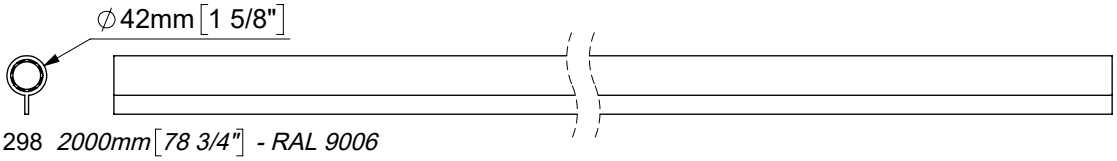

K2-71298 *2000mm [78 3/4"] - RAL 9006*
K2-71498 *2000mm [78 3/4"] - RAL 7016*
K2-71698 *2000mm [78 3/4"] - RAL 9016*

33

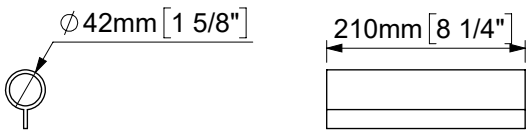

K1-71293 *RAL 9006*
K1-71493 *RAL 7016*
K1-71693 *RAL 9016*

38

K1-71025

39

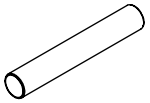

K1-71276

35

K1-71270 *RAL 9006*
K1-71470 *RAL 7016*
K1-71670 *RAL 9016*

40

K2-71278 *RAL 9006*
K2-71478 *RAL 7016*
K2-71678 *RAL 9016*

41

K1-71275 *RAL 9006*
K1-71475 *RAL 7016*
K1-71675 *RAL 9016*

52

K3-90001

58

K3-08002
Ø8 x 40 mm

61

K3-05011 *RAL 9006*
K3-10230 *RAL 7016*
K3-10130 *RAL 9016*
M5 x 20 mm

71

K3-06027 *RAL 9006*
K3-10228 *RAL 7016*
K3-10128 *RAL 9016*
Ø5 x 50 mm

79

K3-06375 *RAL 9006*
K3-10245 *RAL 7016*
K3-10145 *RAL 9016*
Ø5 x 80 mm

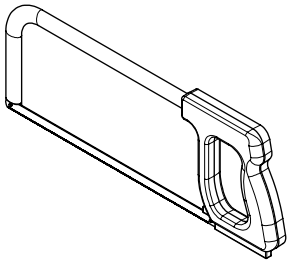

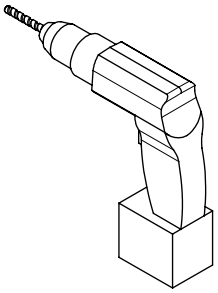

Torx 25

PH 2

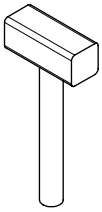

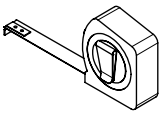

3 mm

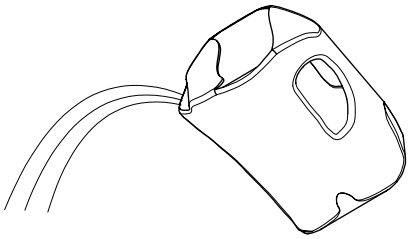

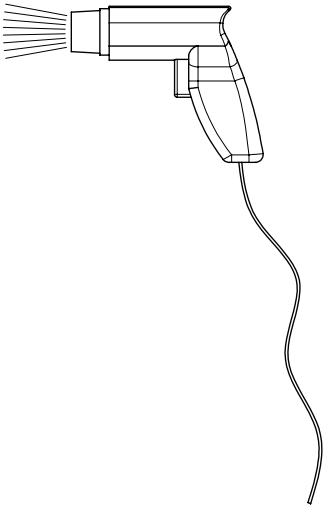

1 – 34

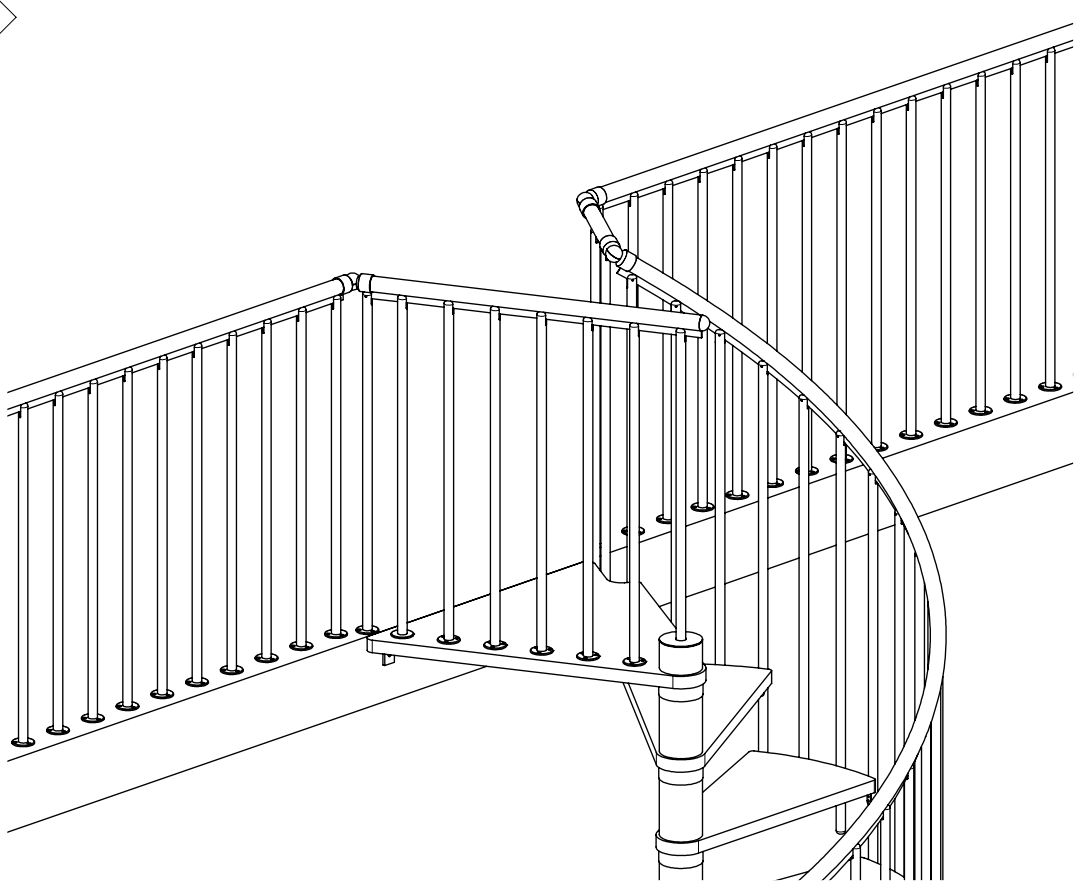

51 – 78

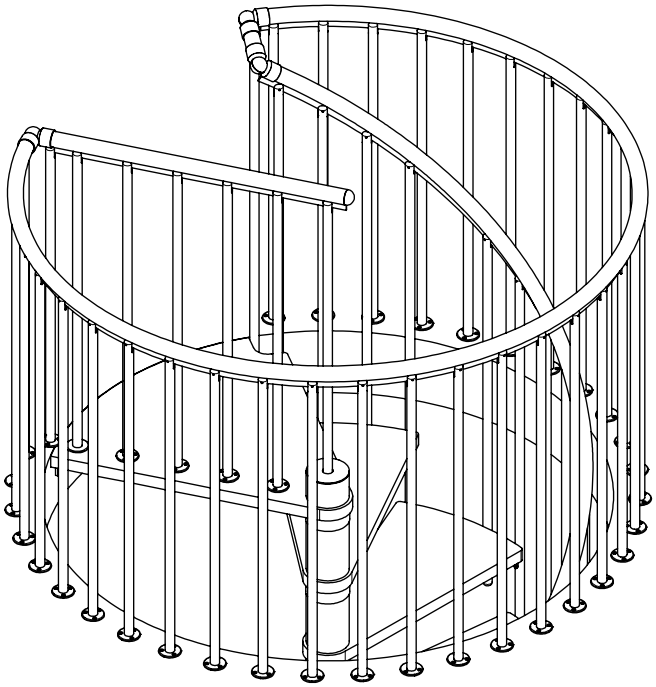

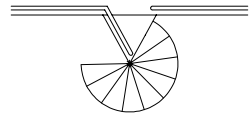

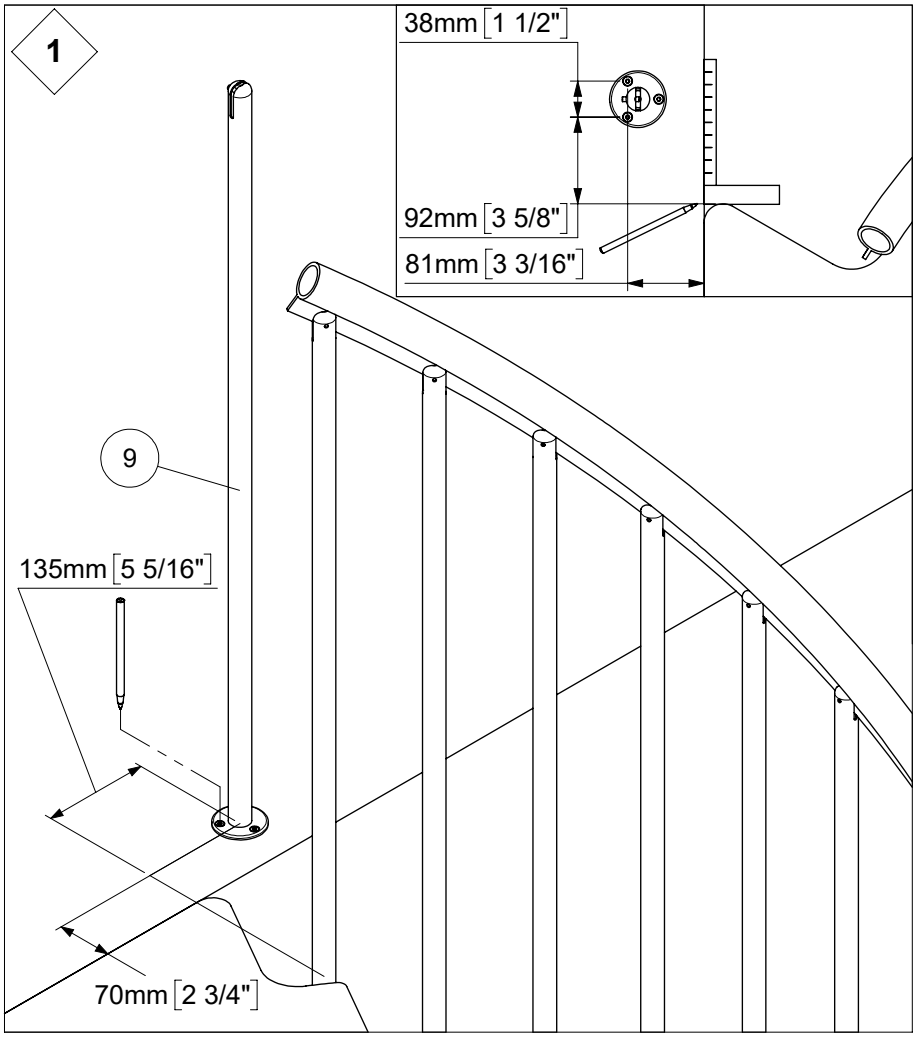
1
38mm [1 1/2"]
92mm [3 5/8"]
81mm [3 3/16"]
9
135mm [5 5/16"]
70mm [2 3/4"]

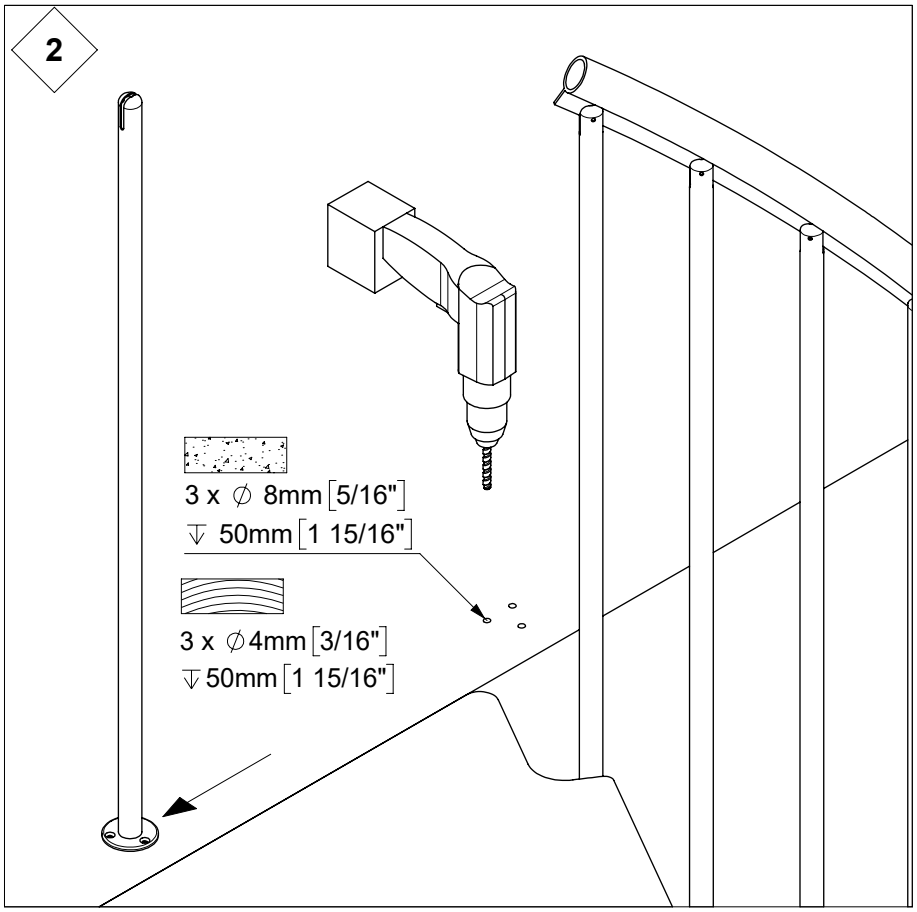
2
3 x ∅ 8mm [5/16"]
⊽ 50mm [1 15/16"]
3 x ∅4mm [3/16"]
⊽50mm [1 15/16"]

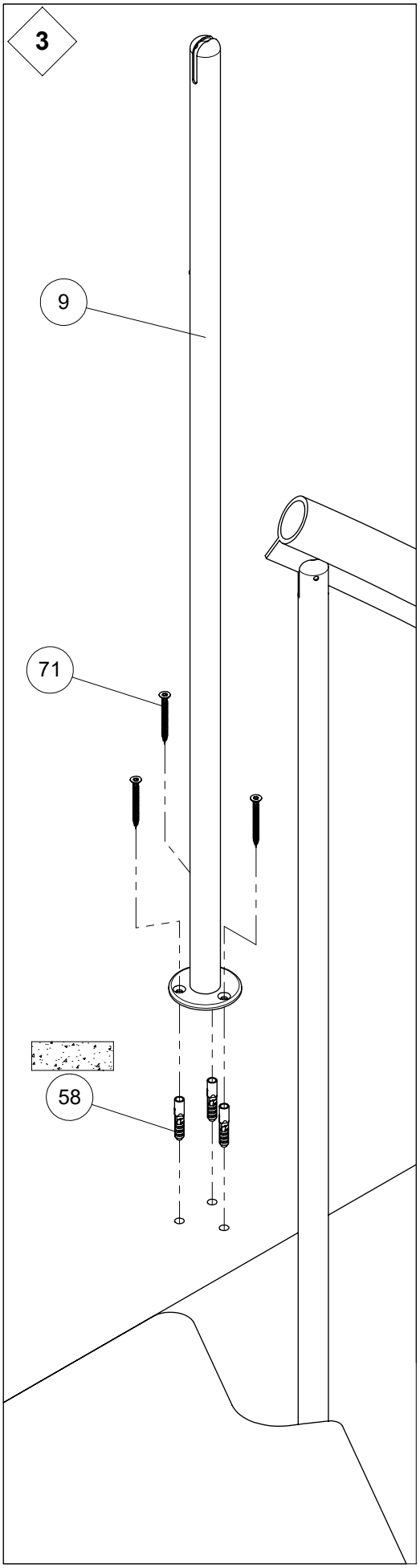
3
9
71
58

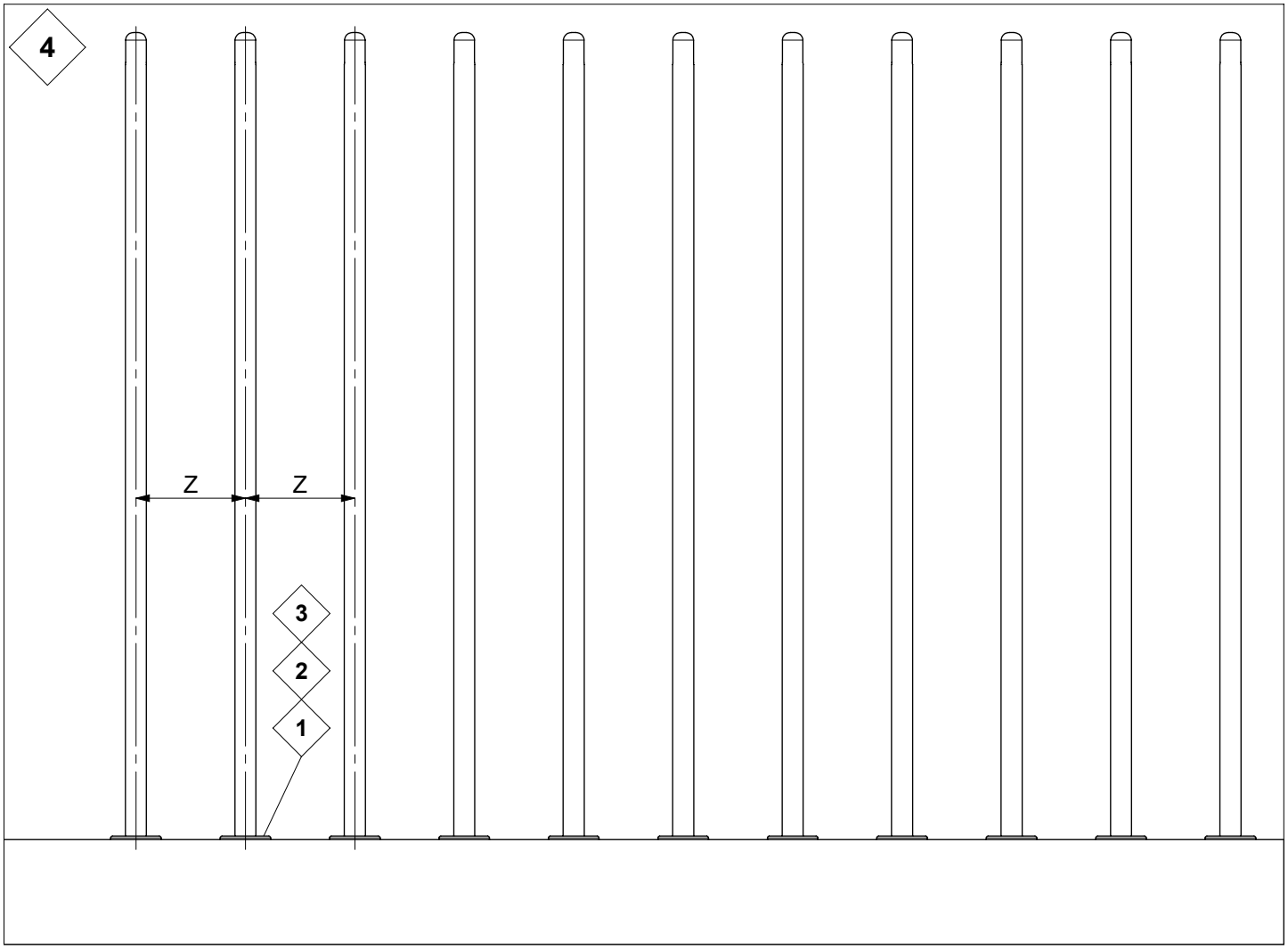
4
Z
Z
3
2
1

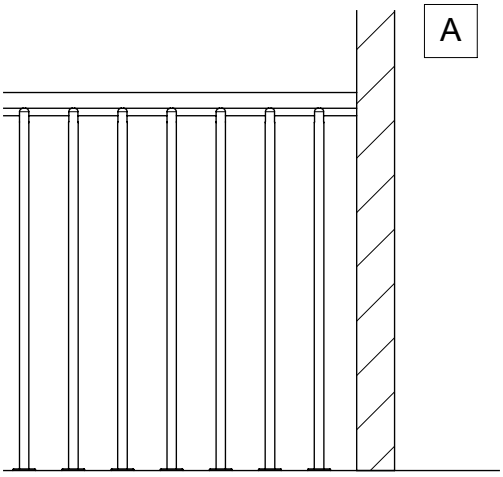
A

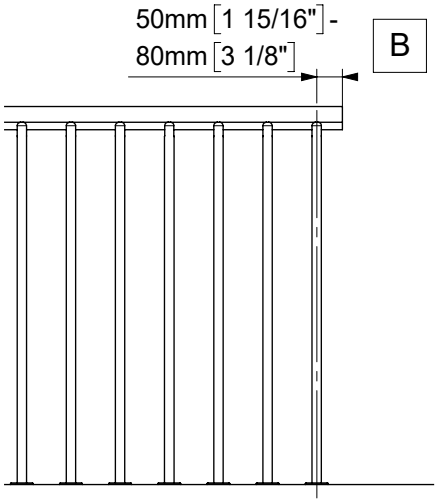
50mm [1 15/16"] -
80mm [3 1/8"]
B

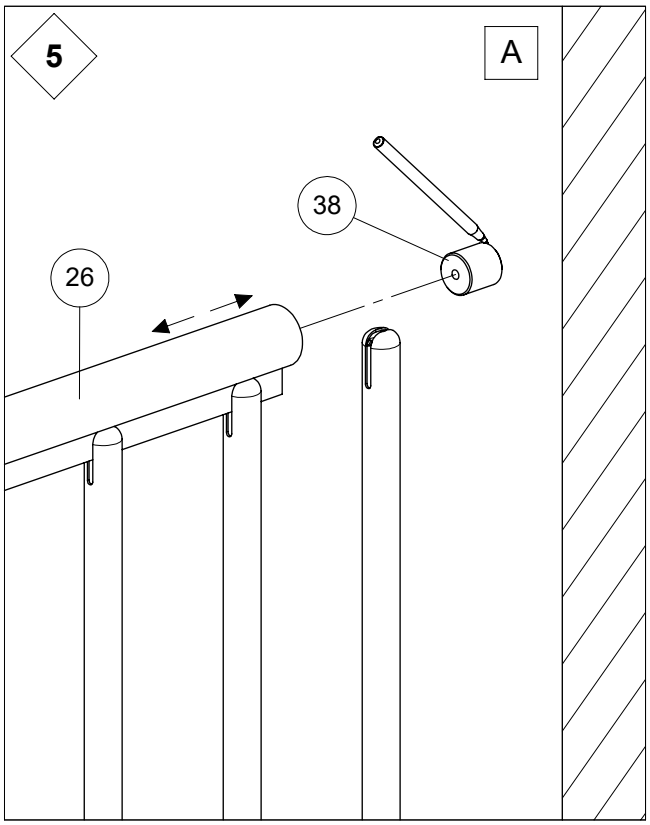
5
A
38
26

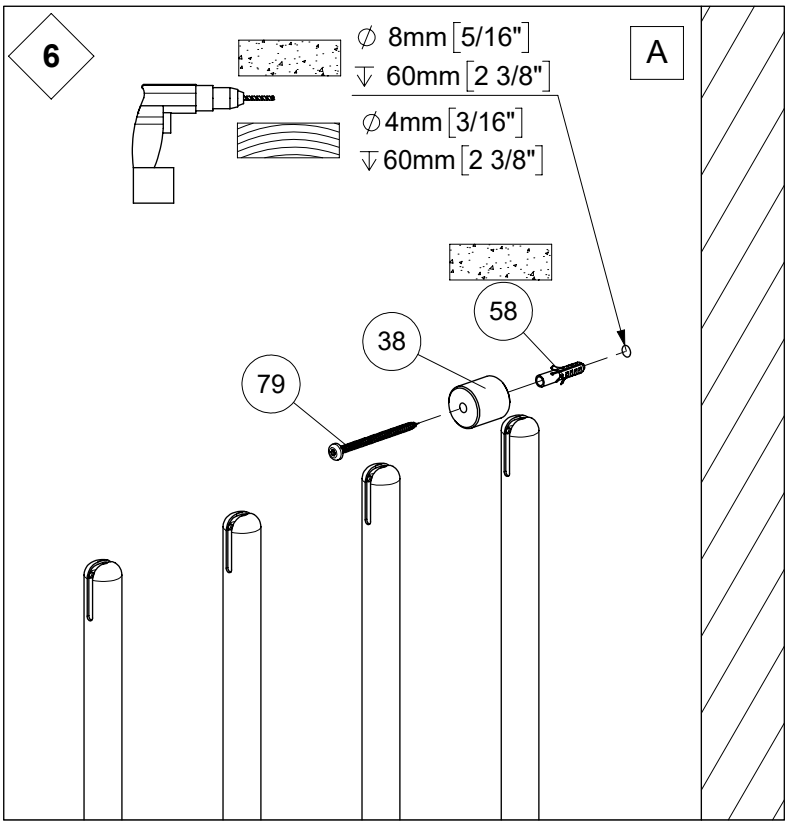
6
A
∅ 8mm [5/16"]
↓ 60mm [2 3/8"]
∅4mm [3/16"]
↓60mm [2 3/8"]
58
38
79

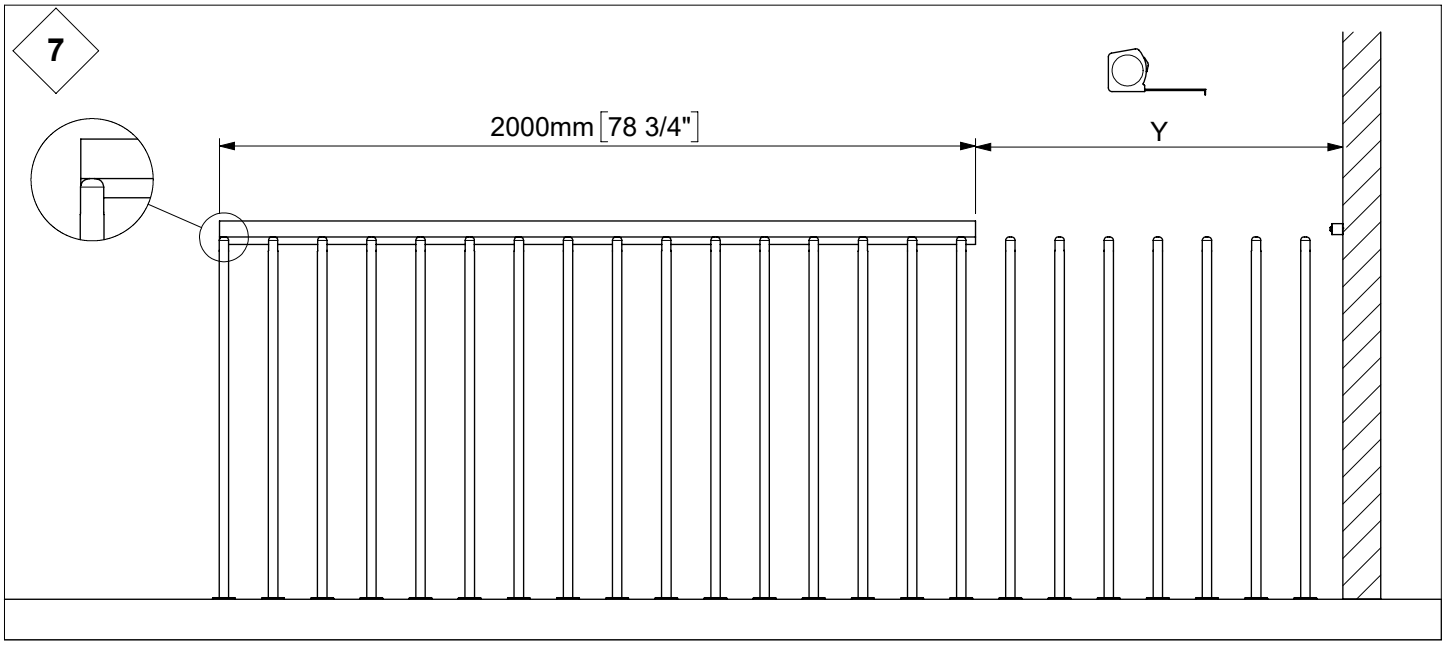
7
2000mm [78 3/4"]
Y

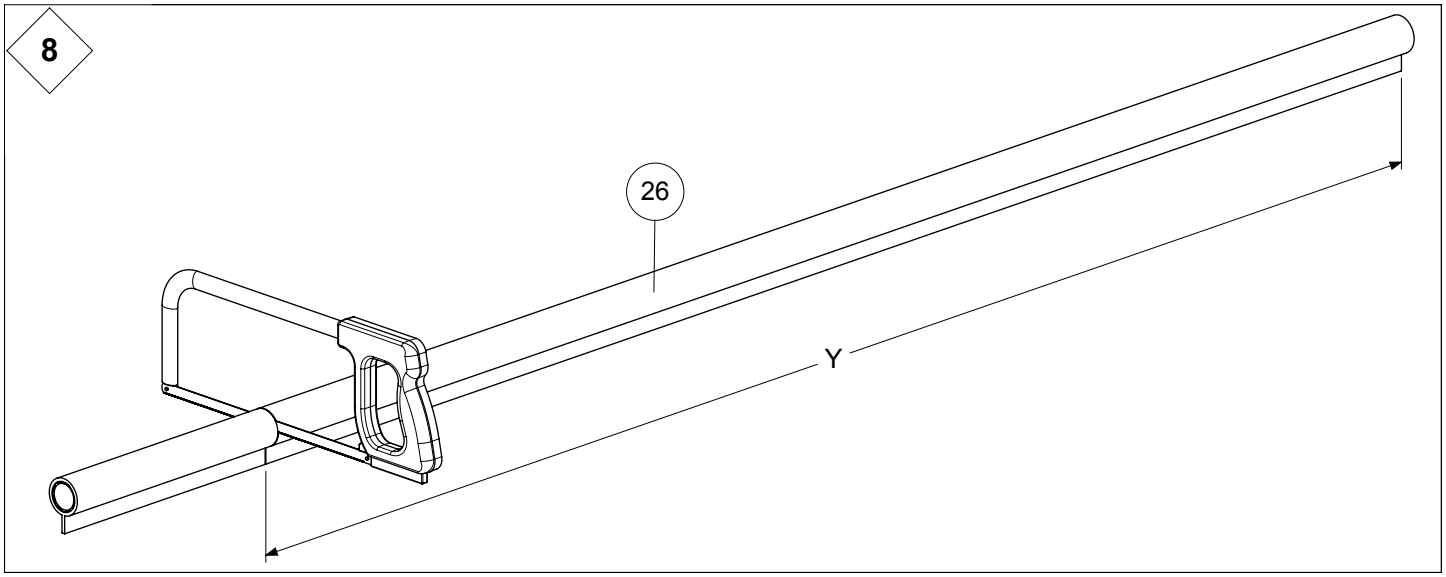
8
26
Y

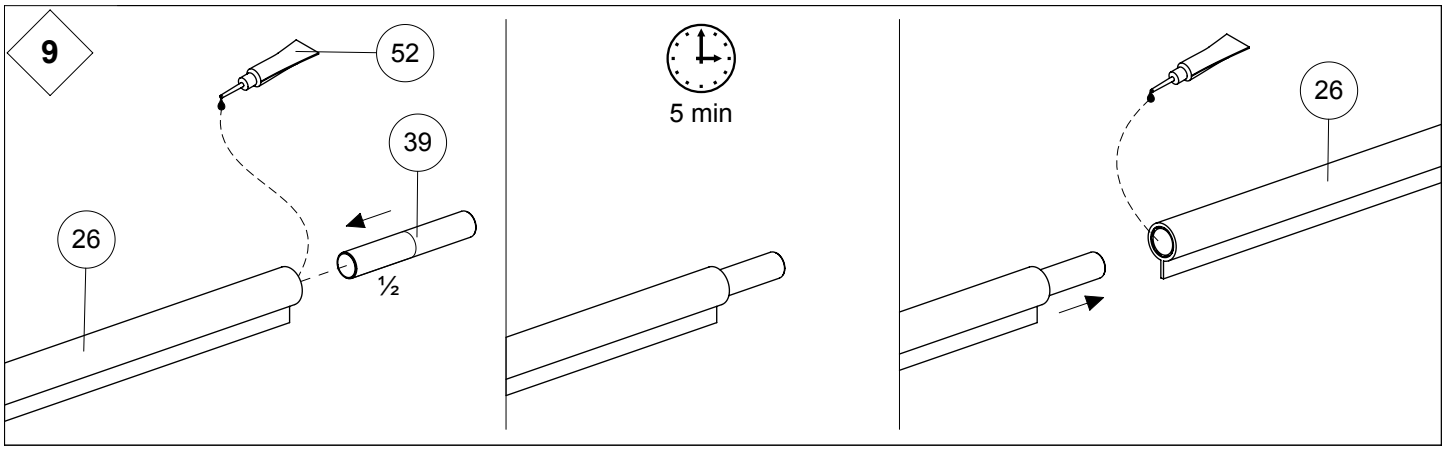
9
52
39
26
½
5 min
26

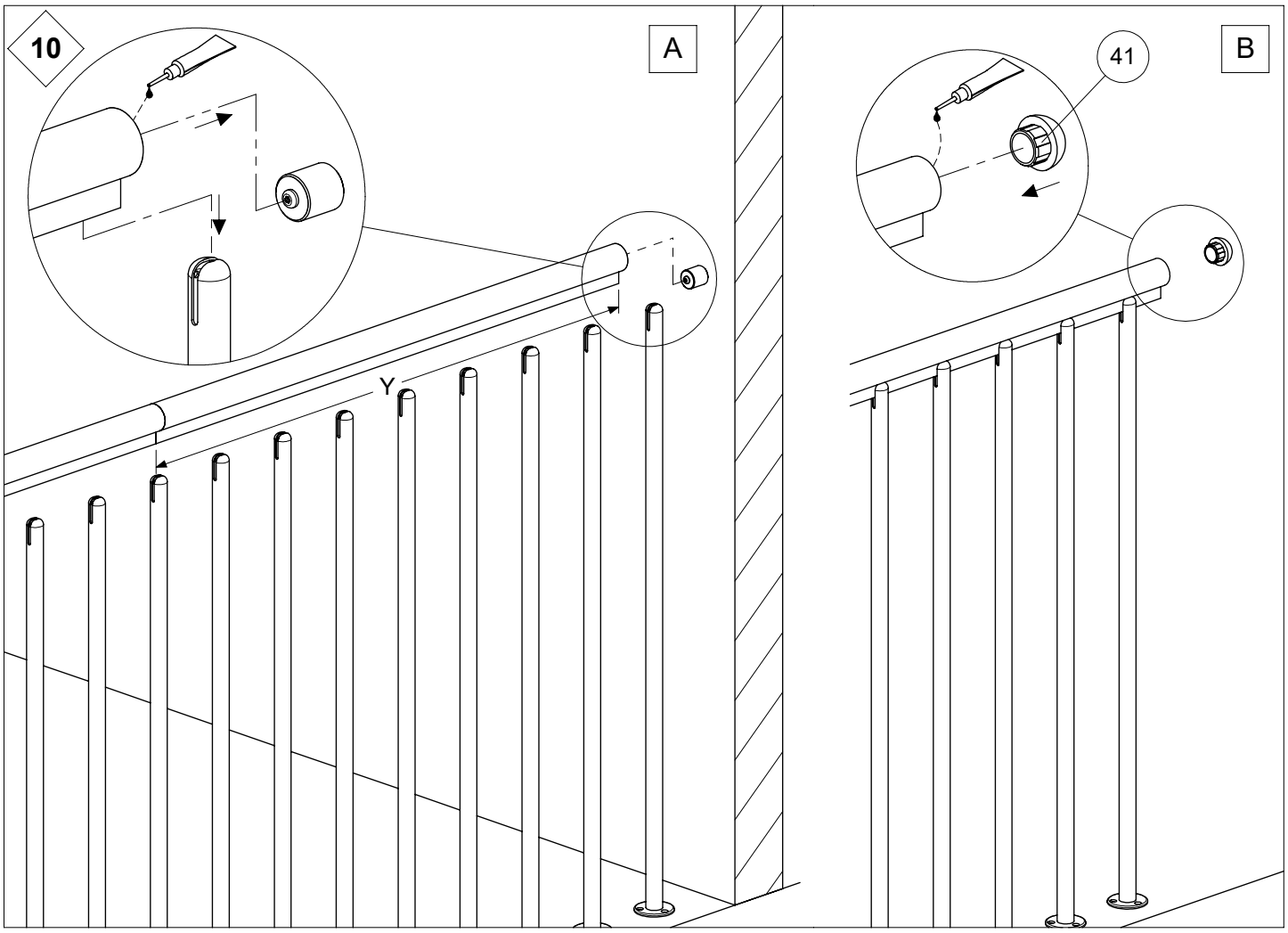
10
A
Y
B
41

11

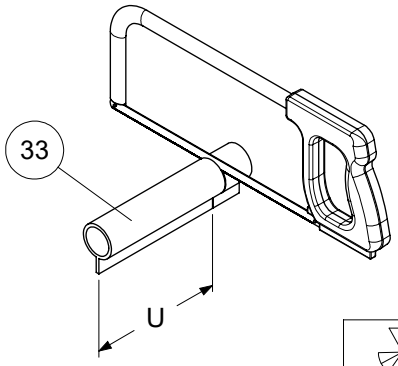

	U
∅ 120 cm [47"]	180mm [7 1/16"]
∅ 140 cm [55"]	195mm [7 11/16"]
∅ 160 cm [63"]	210mm [8 1/4"]

12

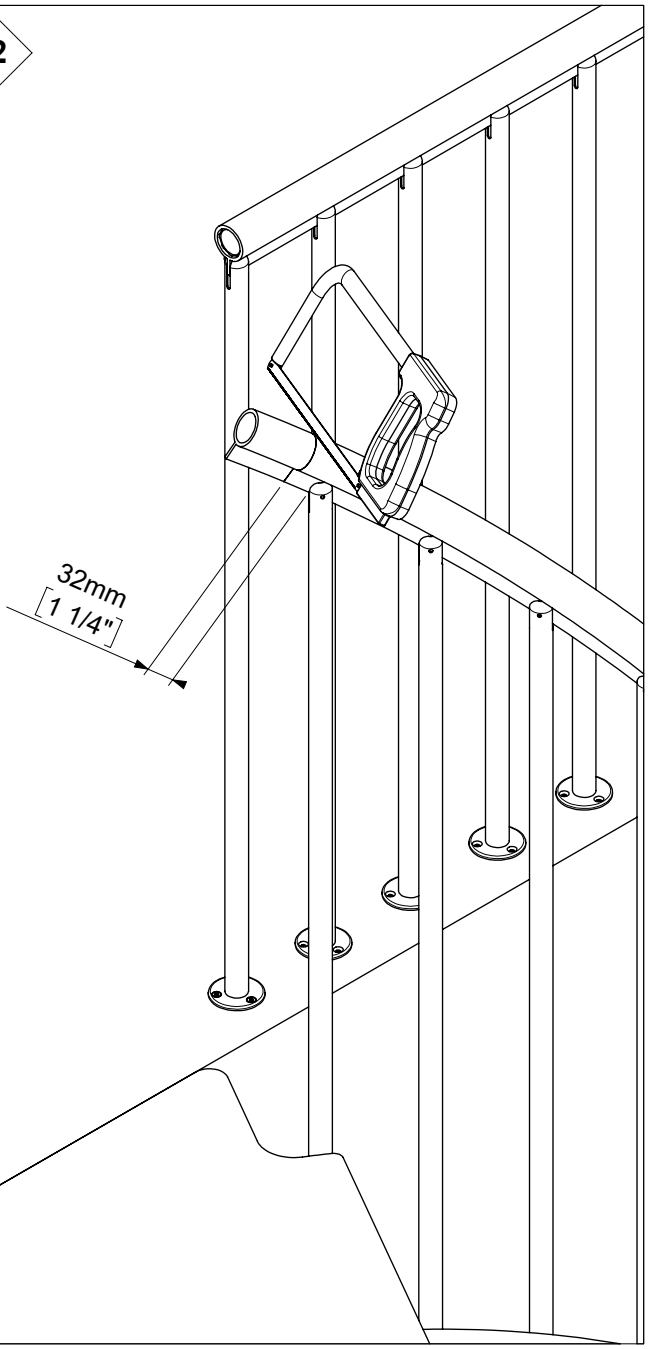

13

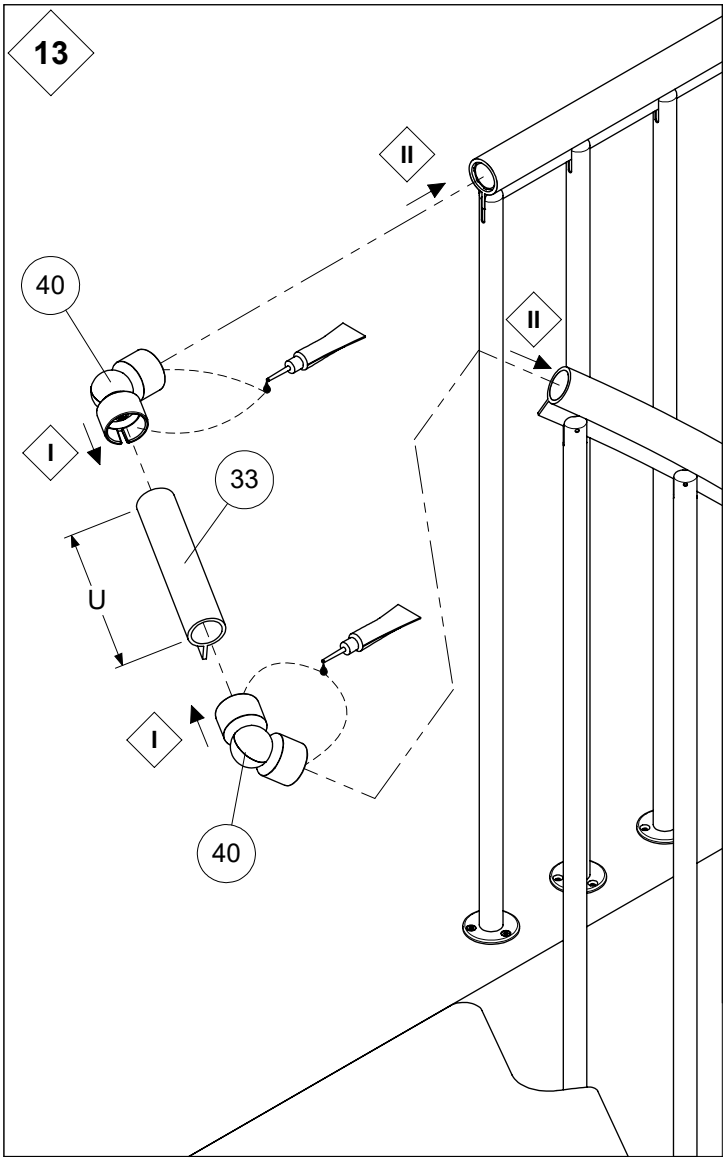

14

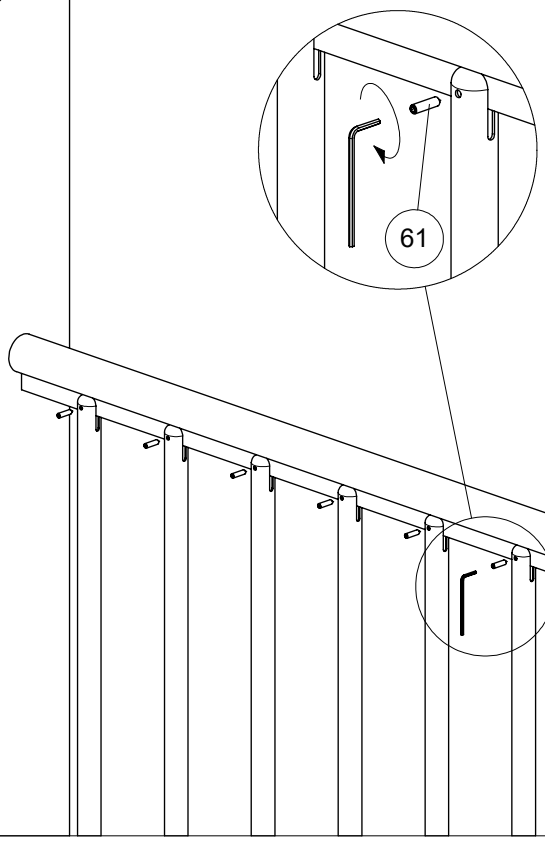

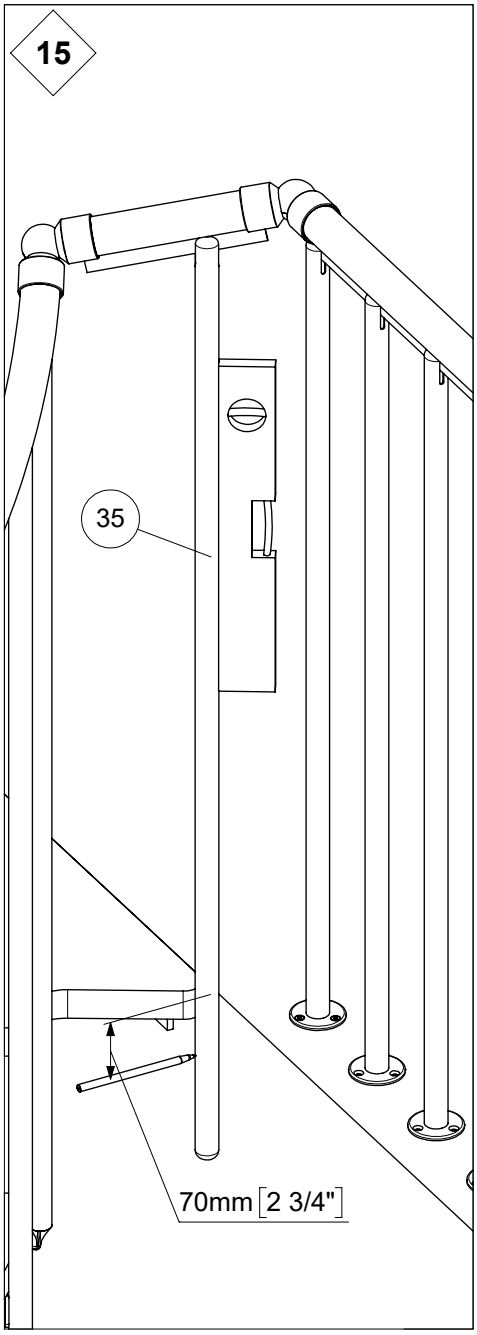
15
35
70mm [2 3/4"]

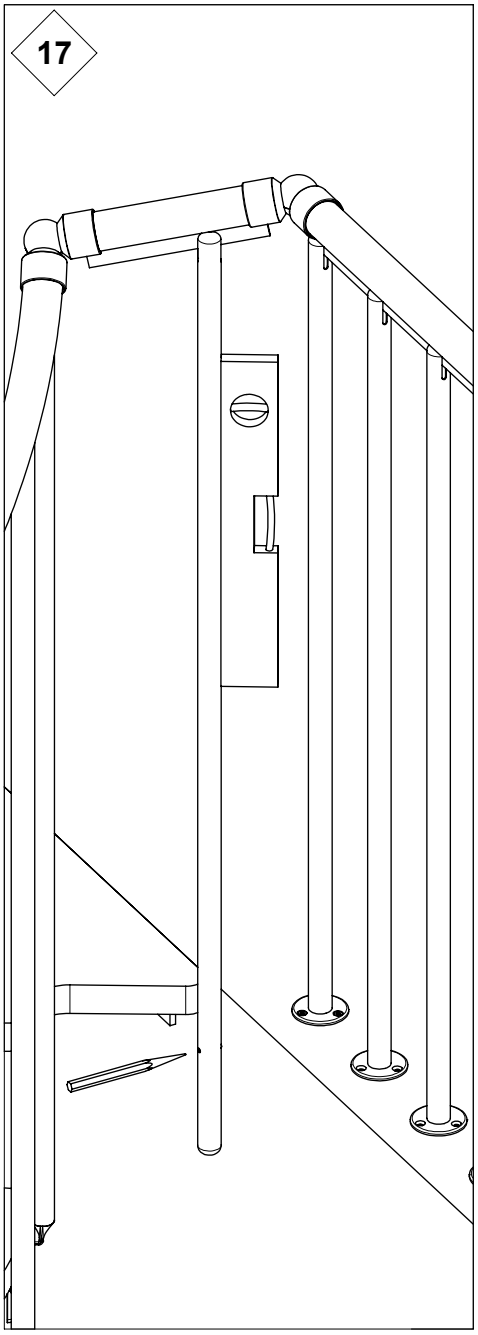
17

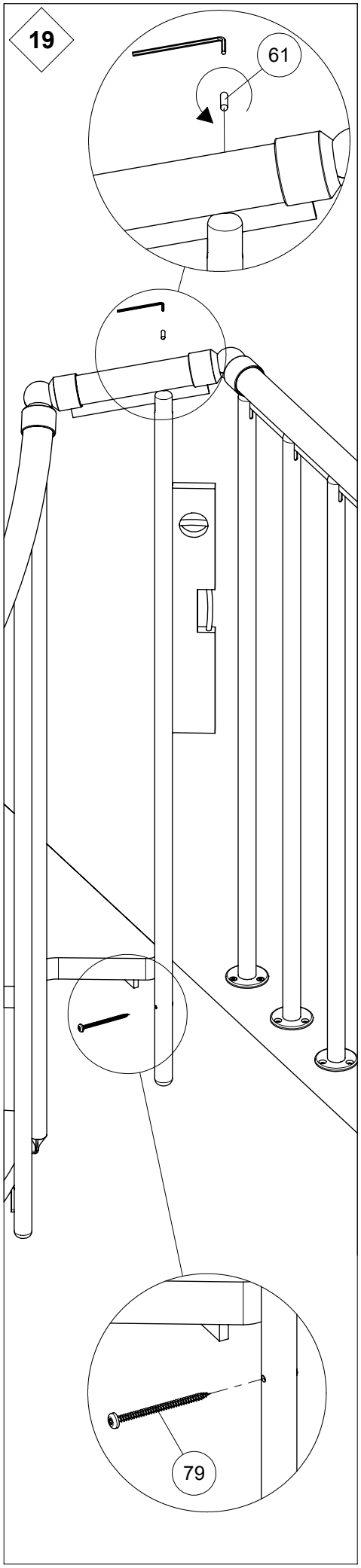
19
61
79

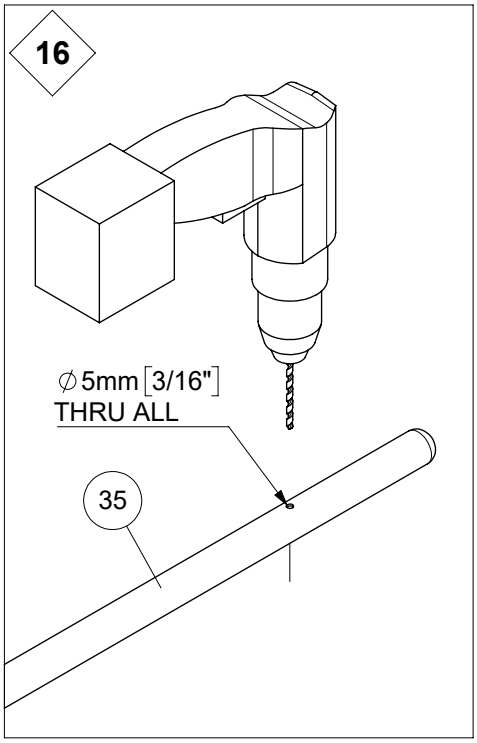
16
∅5mm [3/16"]
THRU ALL
35

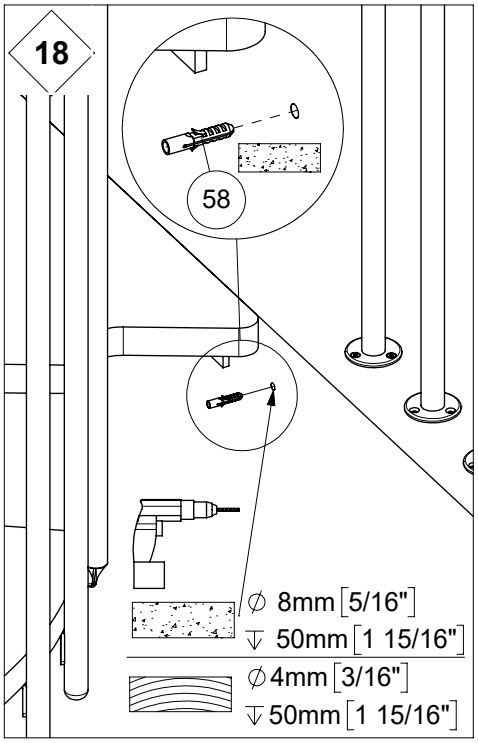
18
58
∅ 8mm [5/16"]
⇓ 50mm [1 15/16"]
∅4mm [3/16"]
⇓50mm [1 15/16"]

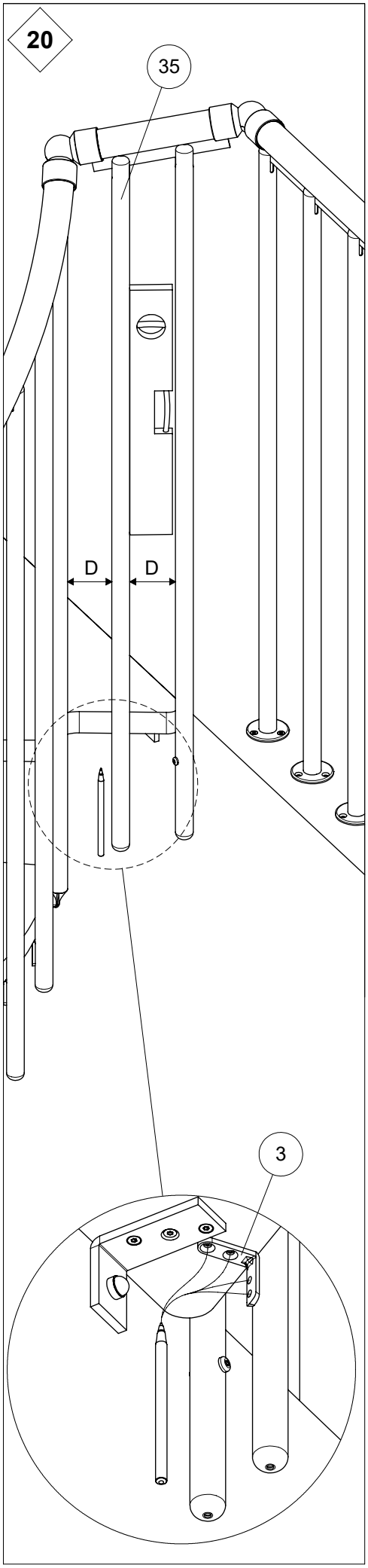
20
35
D
D
3

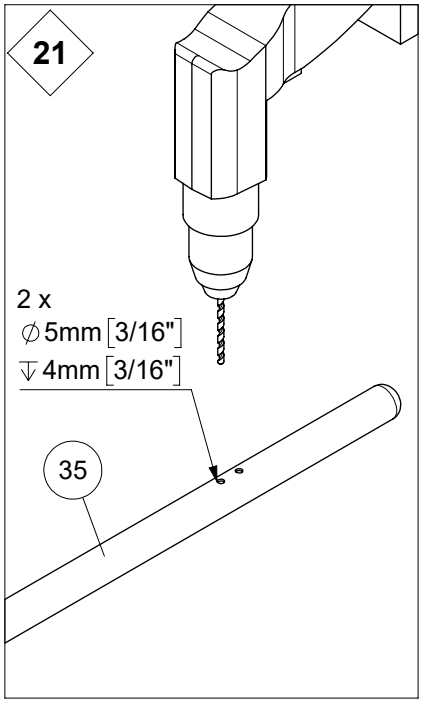
21
2 x
∅5mm [3/16"]
↧4mm [3/16"]
35

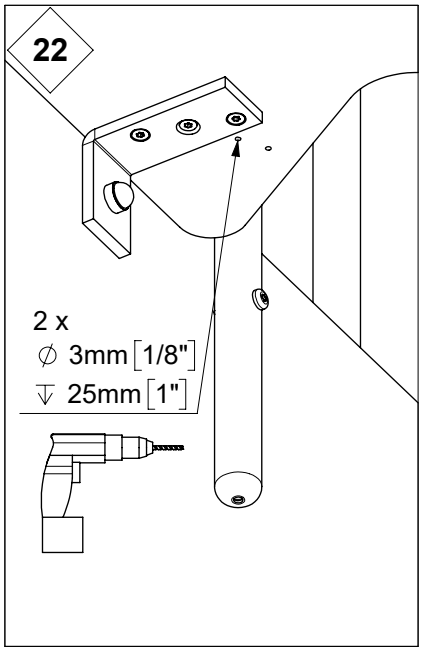
22
2 x
∅ 3mm [1/8"]
↧ 25mm [1"]

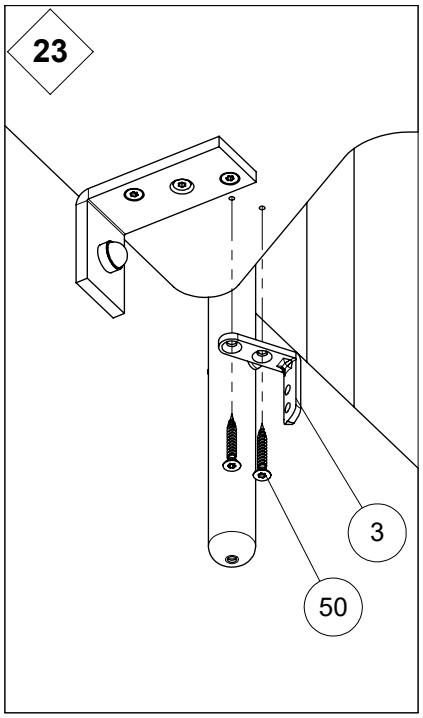
23
3
50

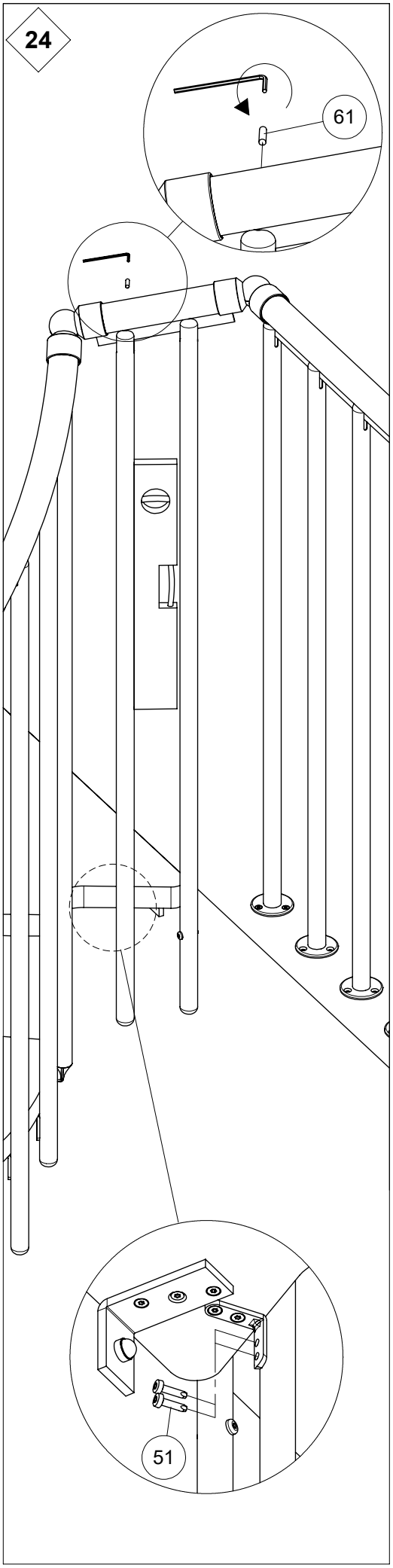
24
61
51

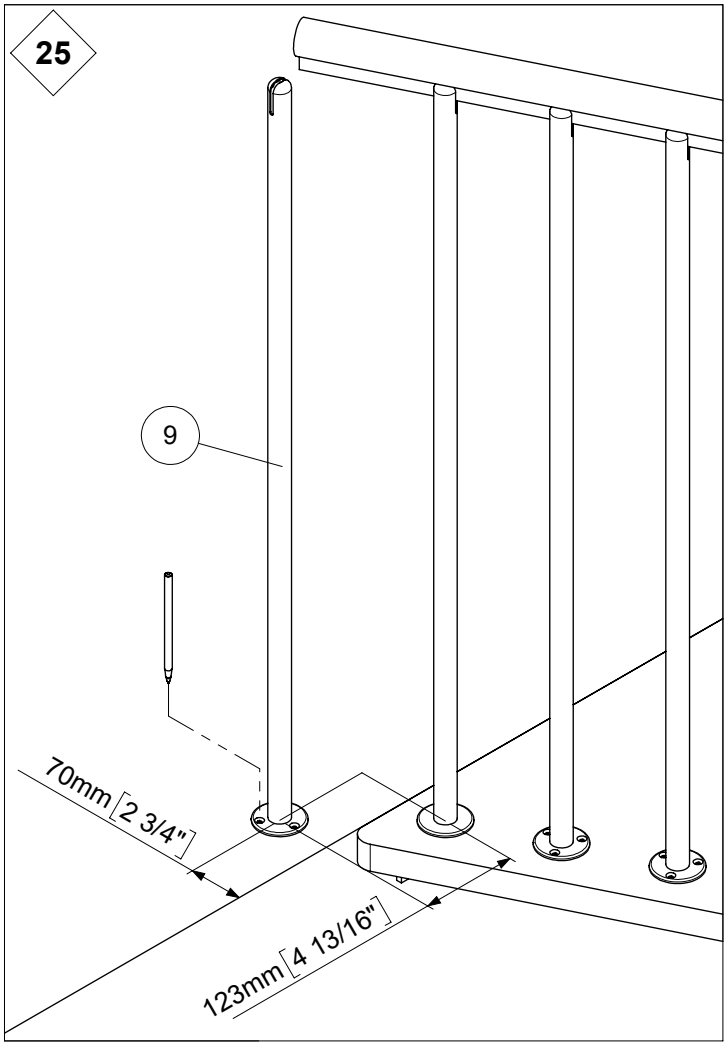
25
9
70mm [2 3/4"]
123mm [4 13/16"]

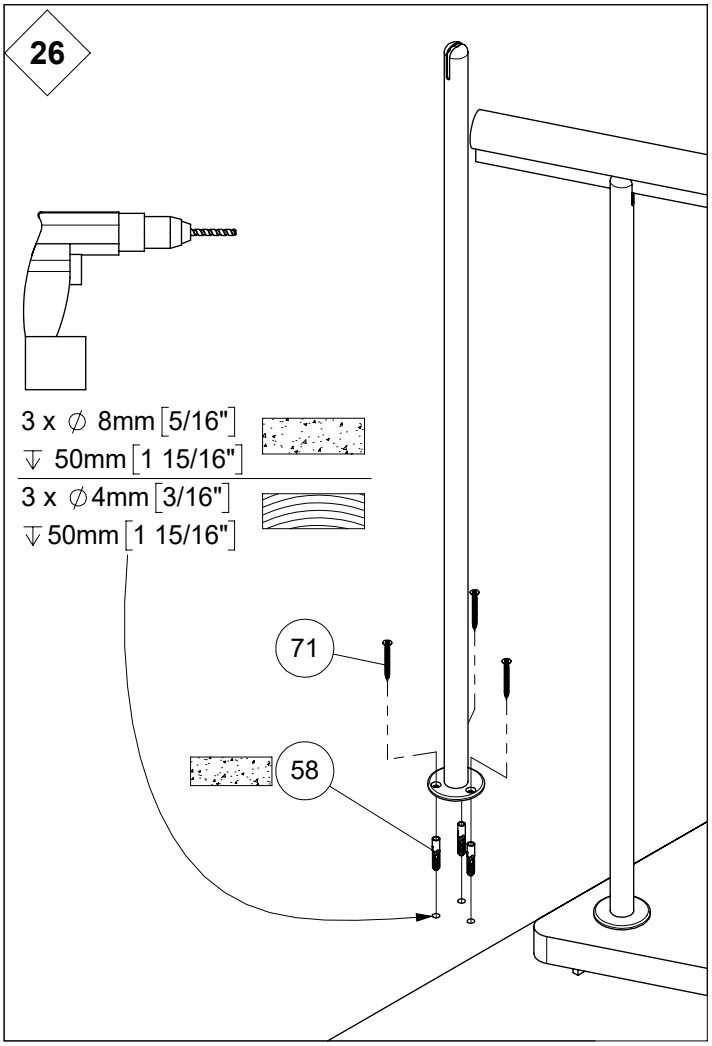
26
3 x ∅ 8mm [5/16"]
50mm [1 15/16"]
3 x ∅4mm [3/16"]
50mm [1 15/16"]
71
58

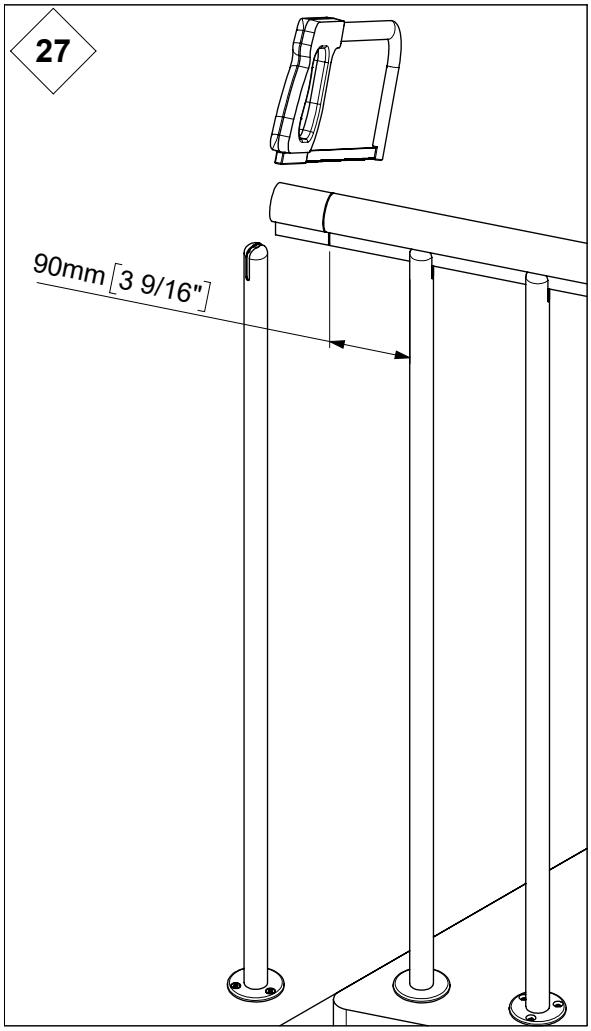
27
90mm [3 9/16"]

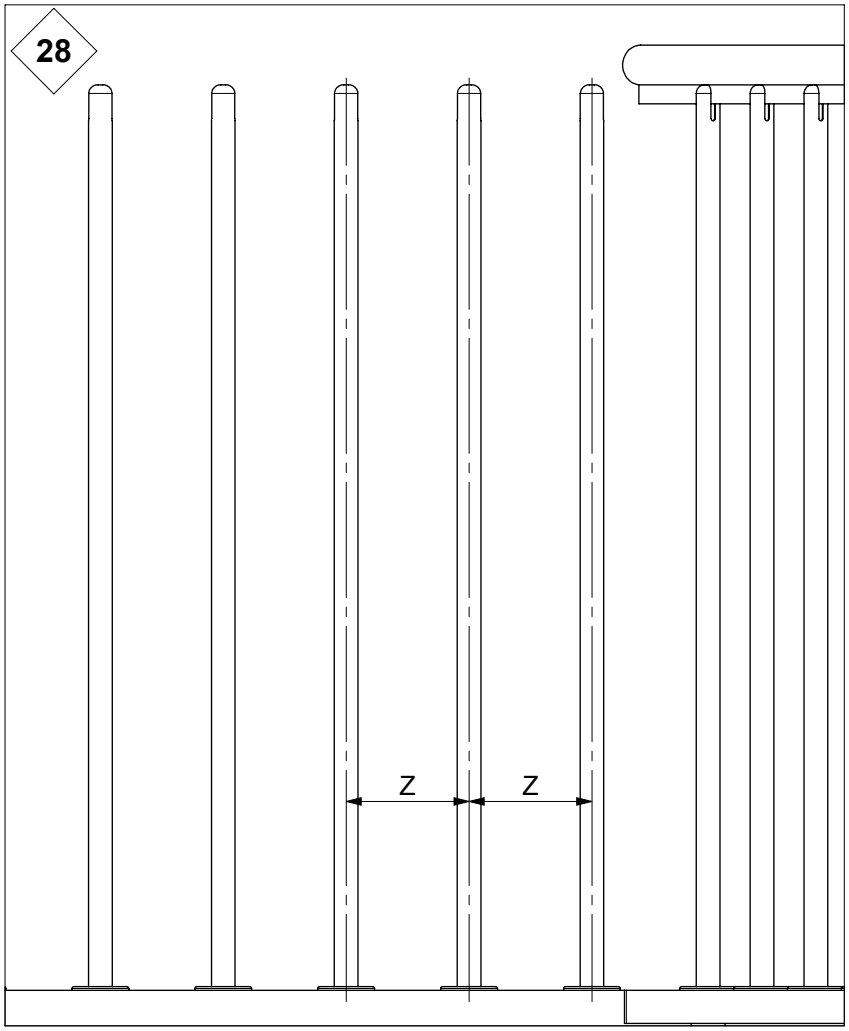
28
Z
Z

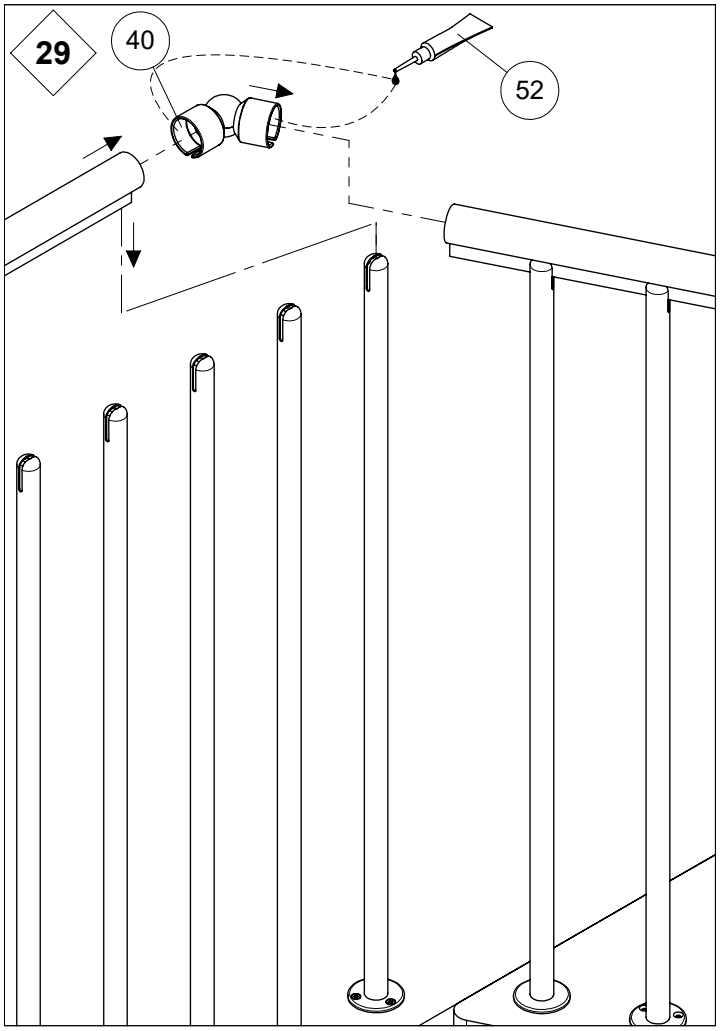
29
40
52

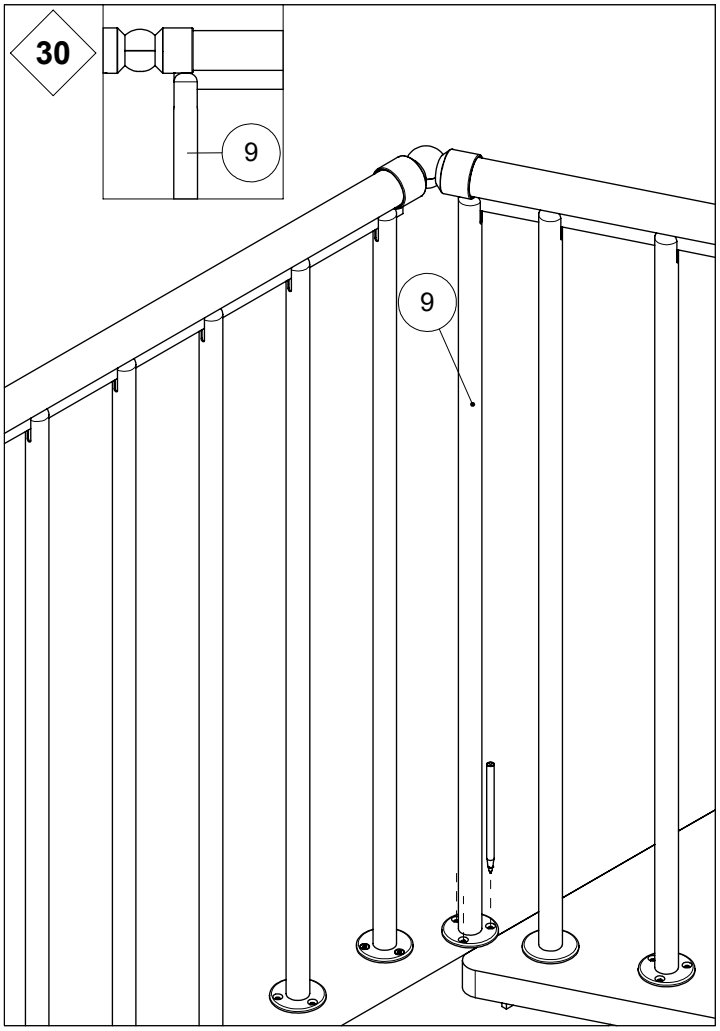
30
9
9

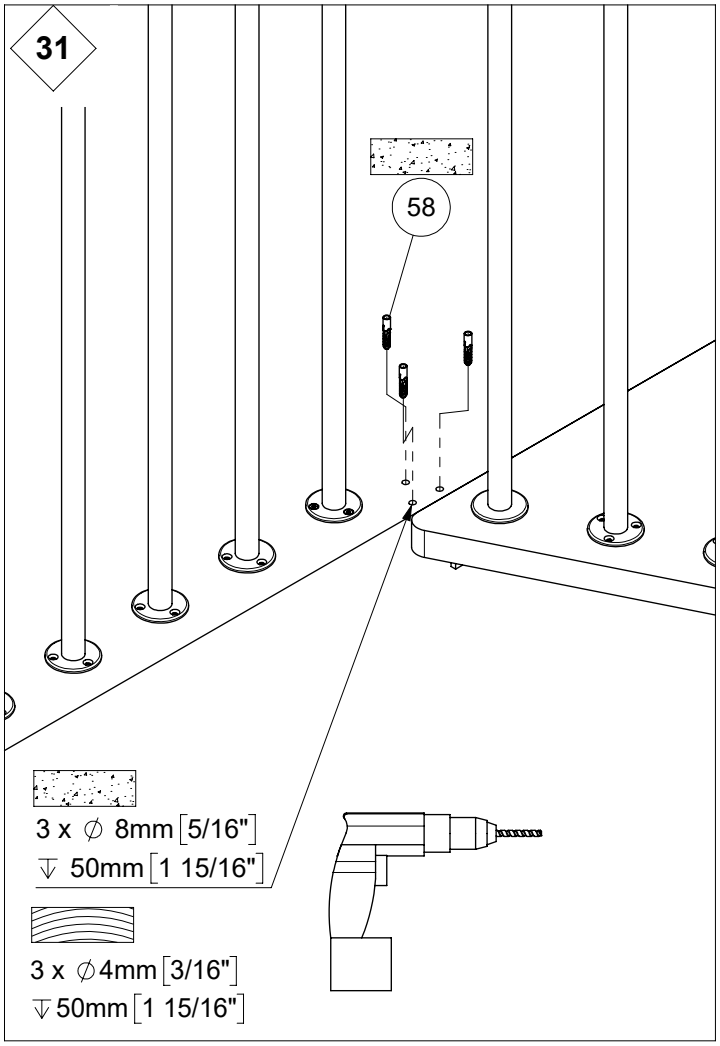
31
58
3 x ∅ 8mm [5/16"]
↓ 50mm [1 15/16"]
3 x ∅4mm [3/16"]
↓50mm [1 15/16"]

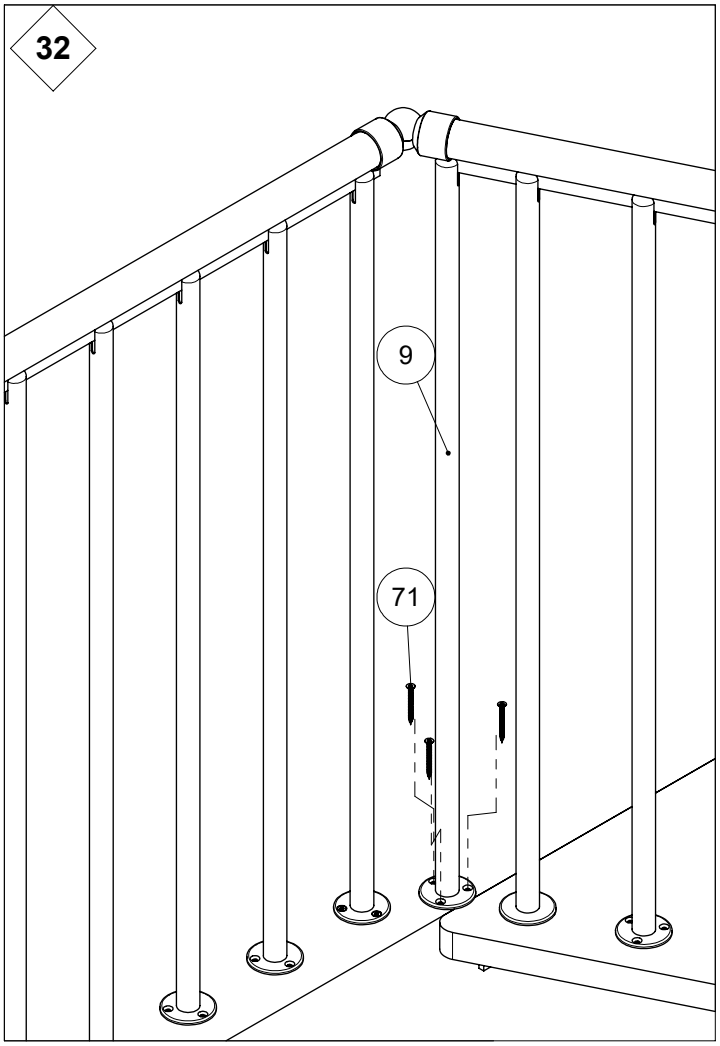
32
9
71

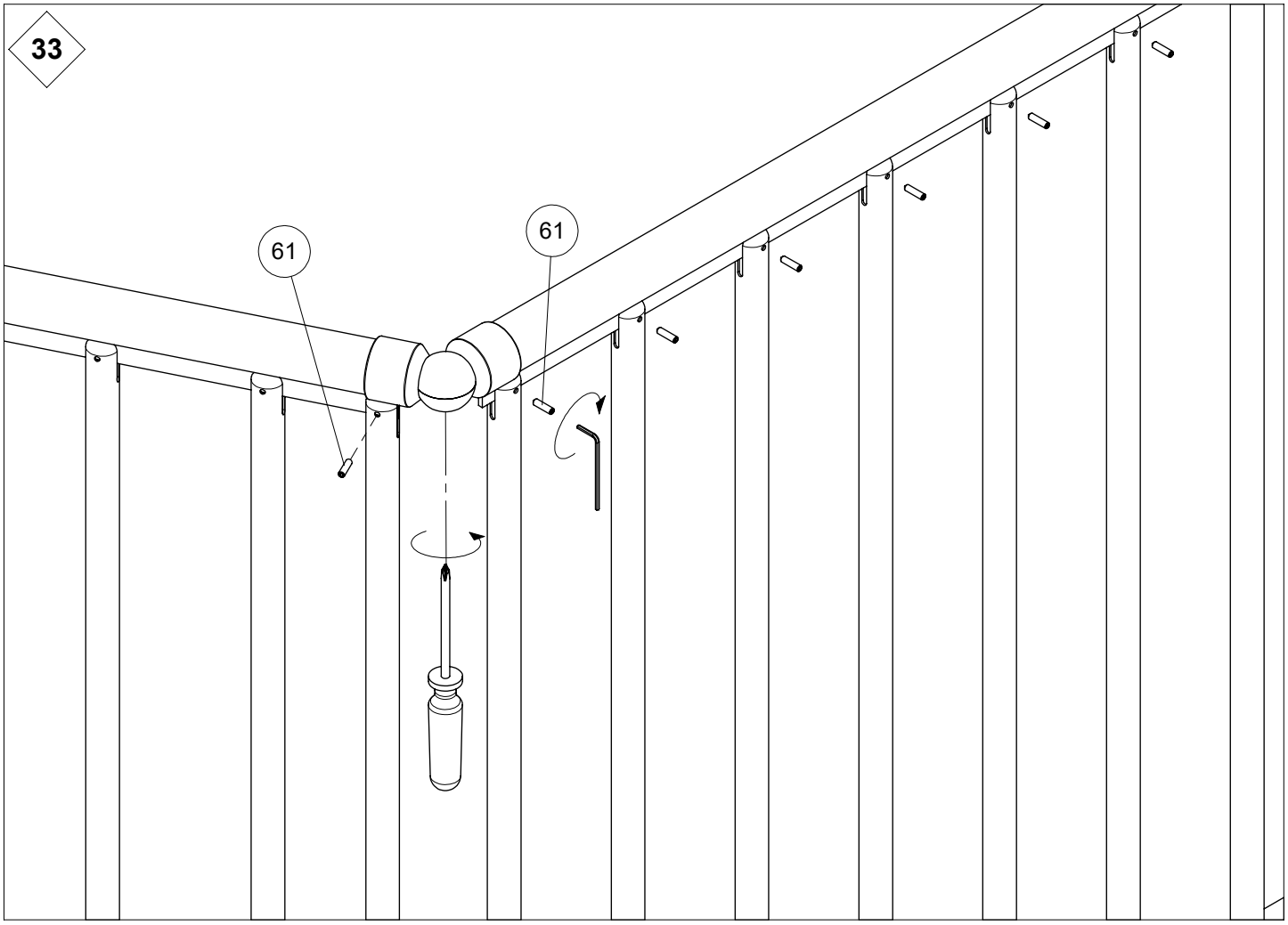
33
61
61

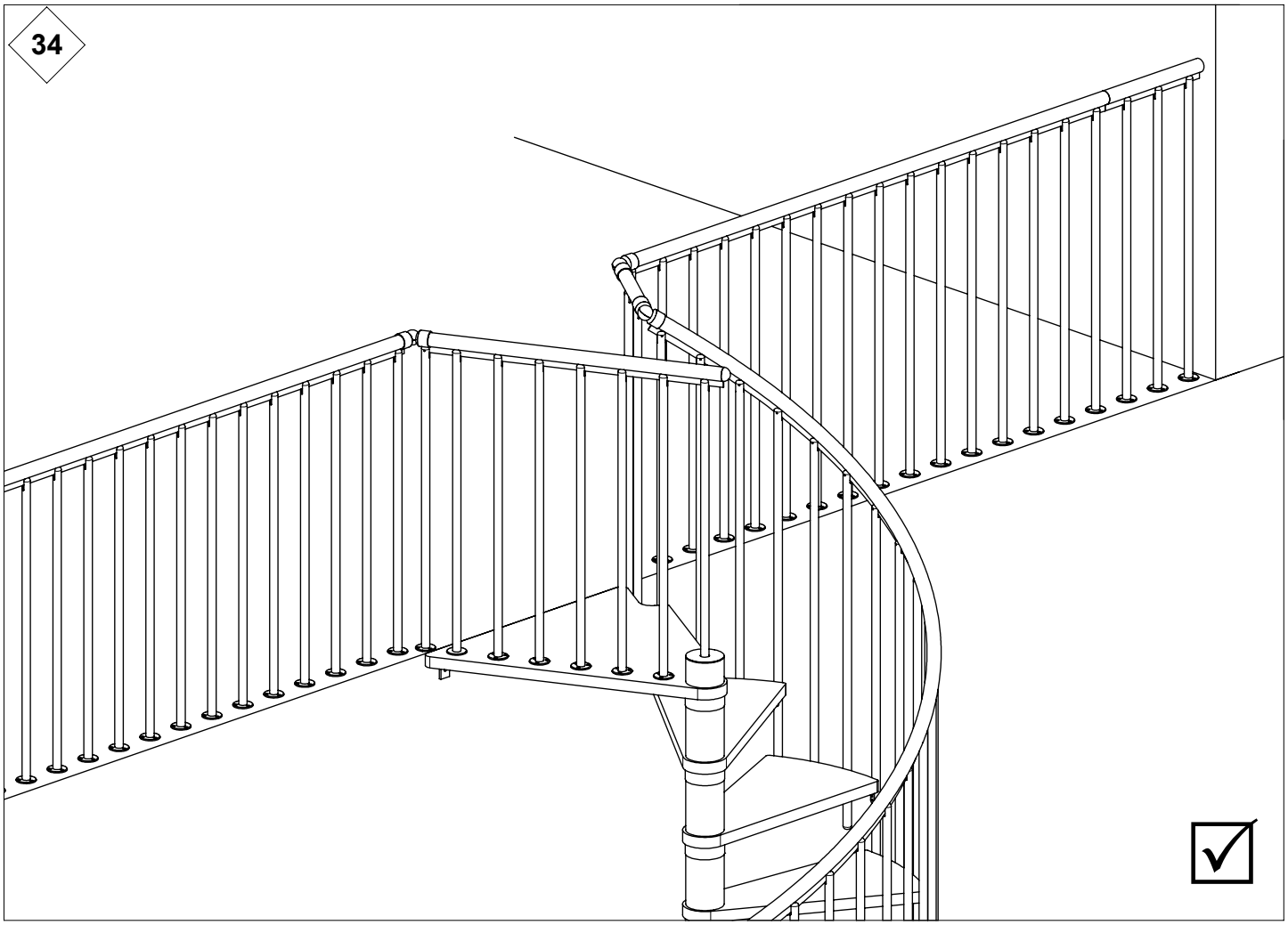
34

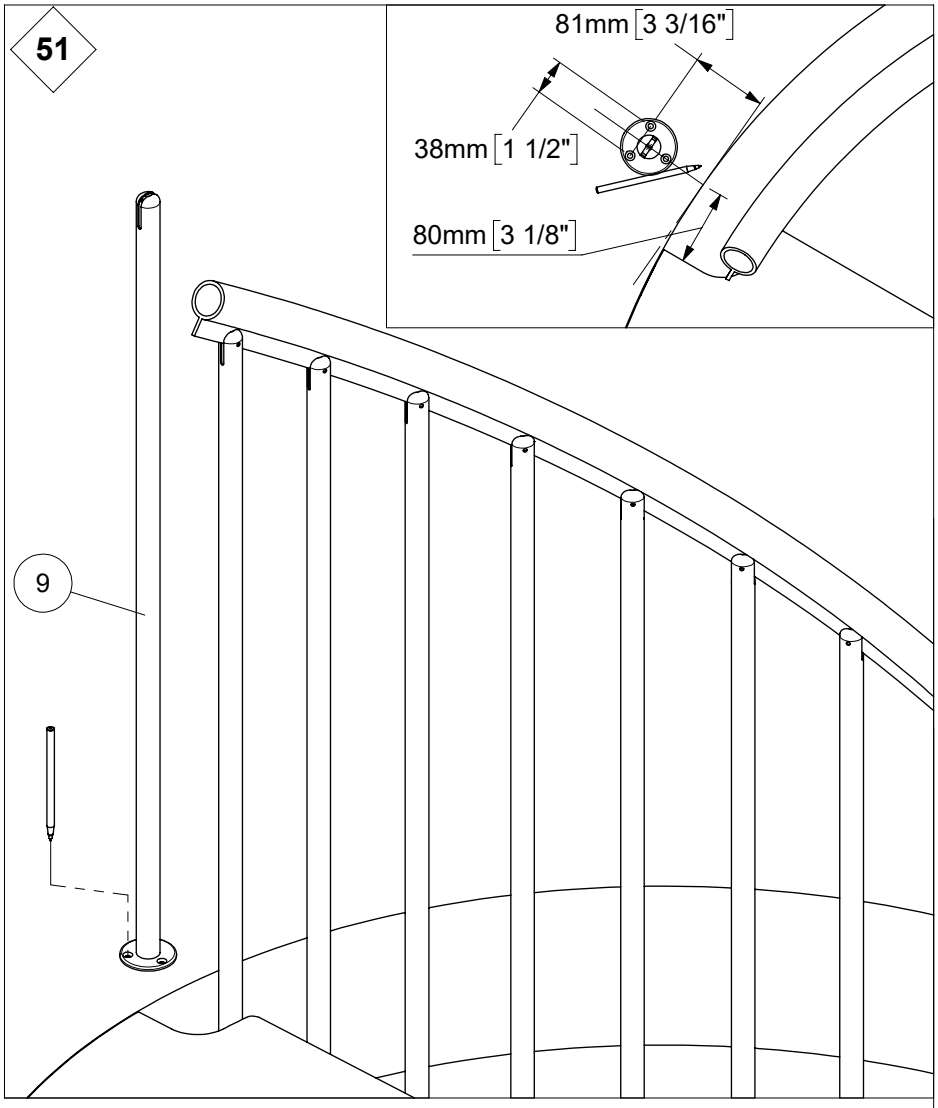
51
81mm [3 3/16"]
38mm [1 1/2"]
80mm [3 1/8"]
9

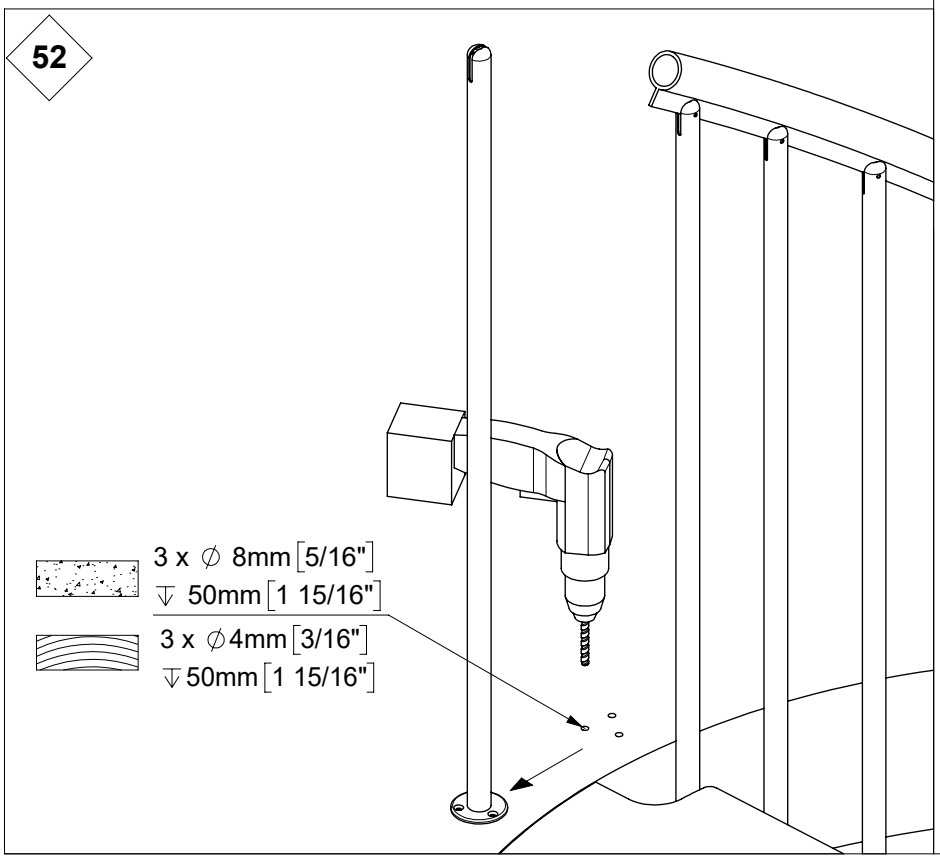
52
3 x ∅ 8mm [5/16"]
↓ 50mm [1 15/16"]
3 x ∅4mm [3/16"]
↓50mm [1 15/16"]

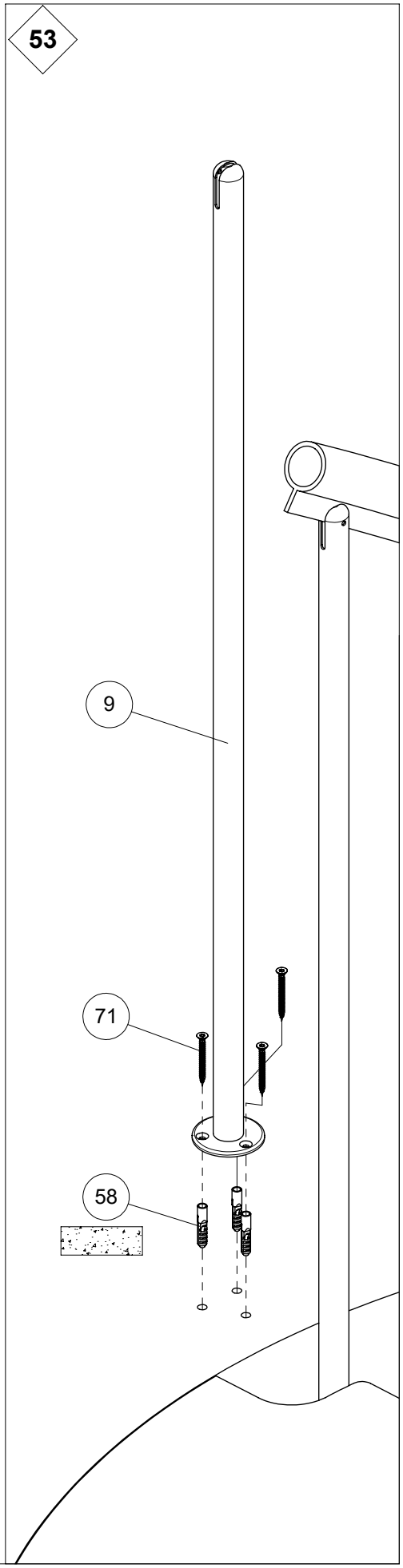
53
9
71
58

54

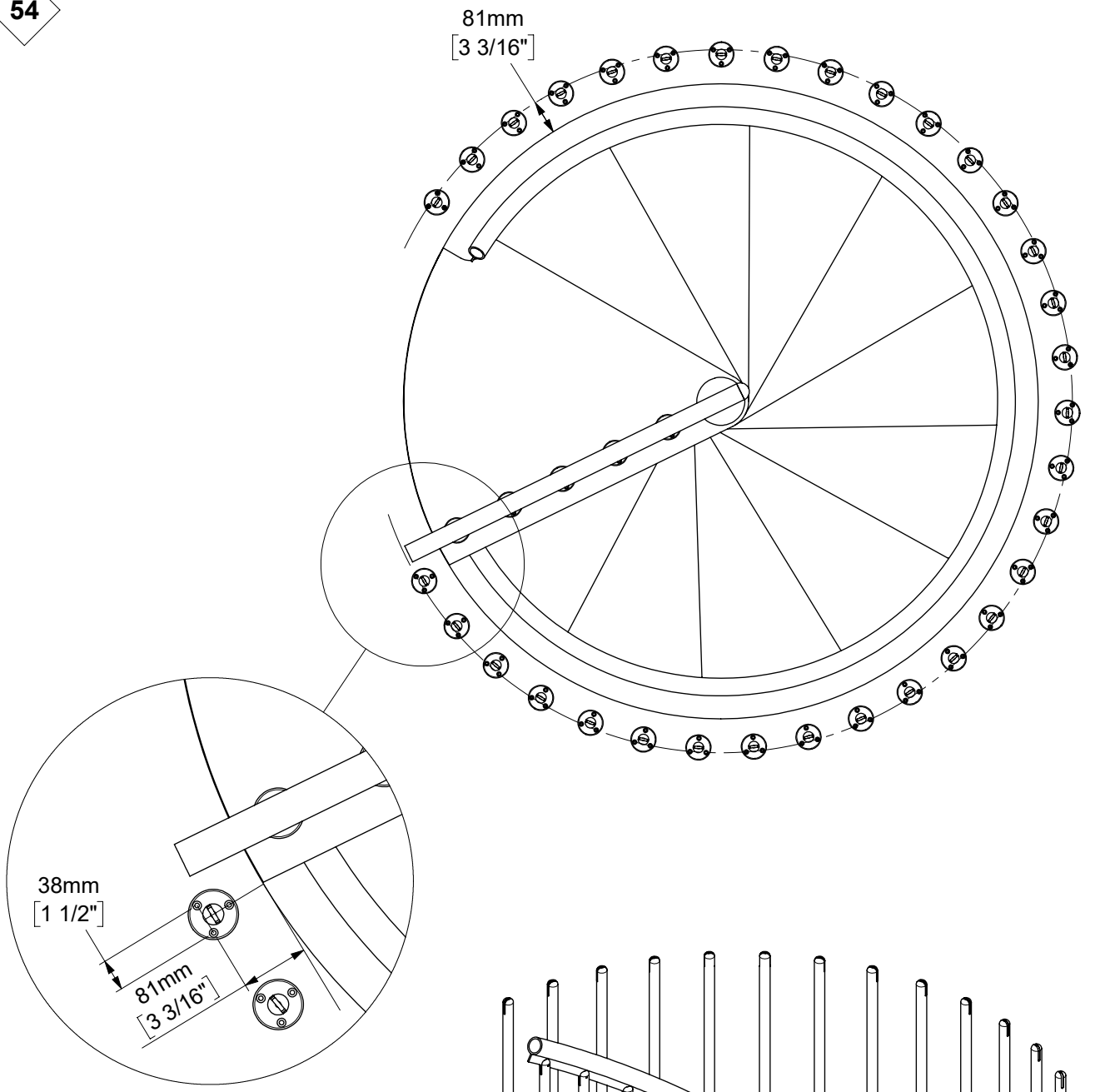

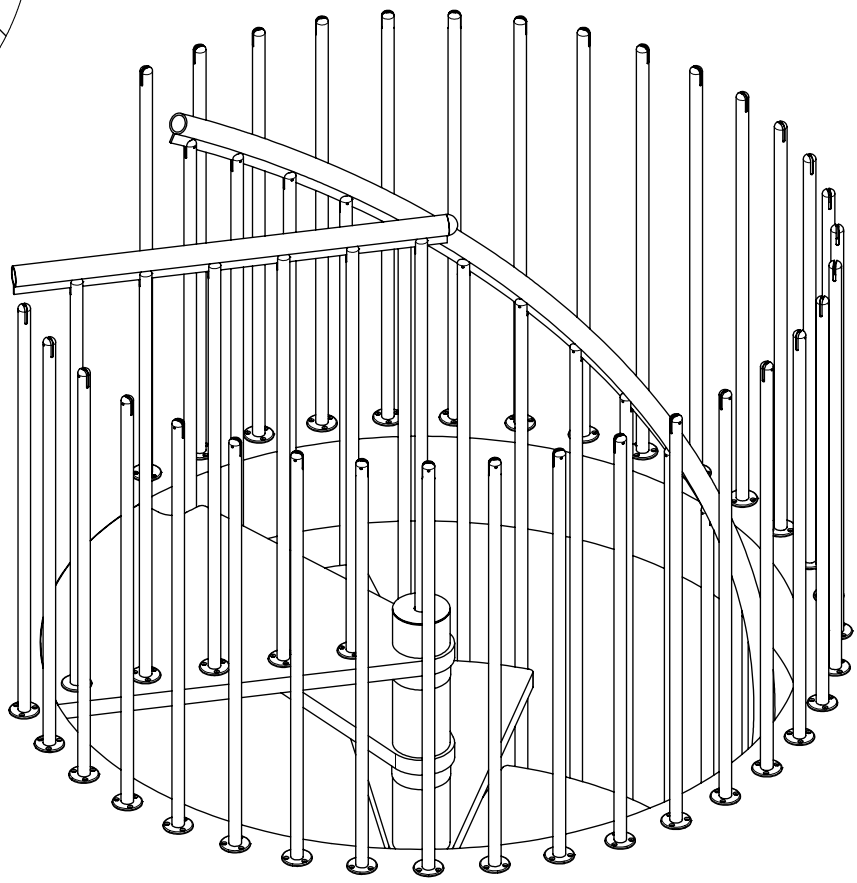

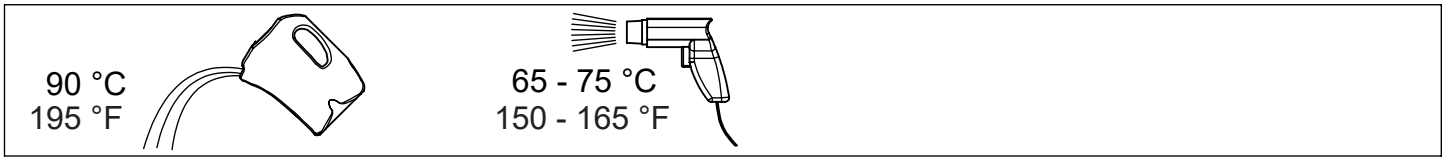
90 °C
195 °F
65 - 75 °C
150 - 165 °F

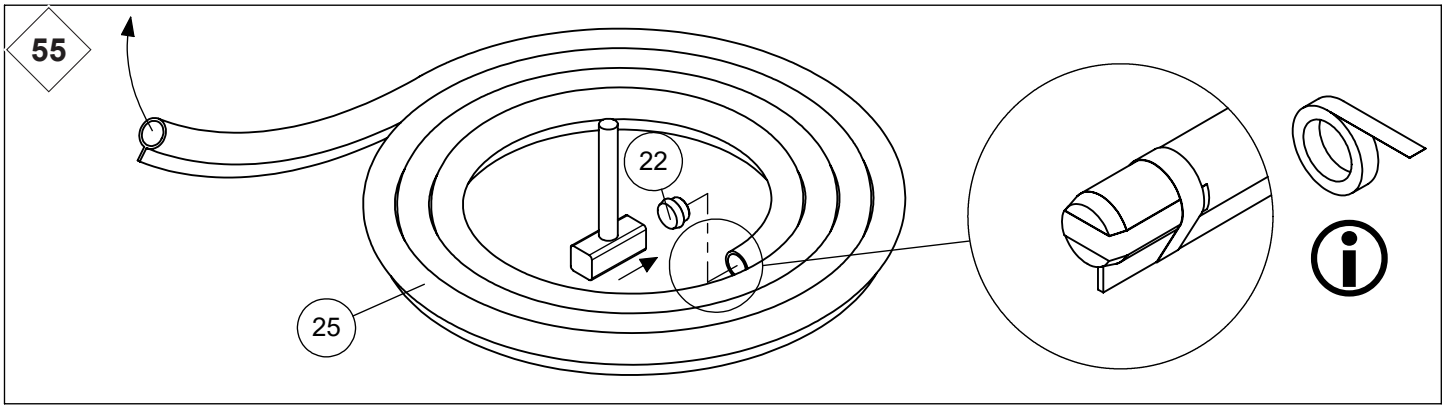
55
22
25

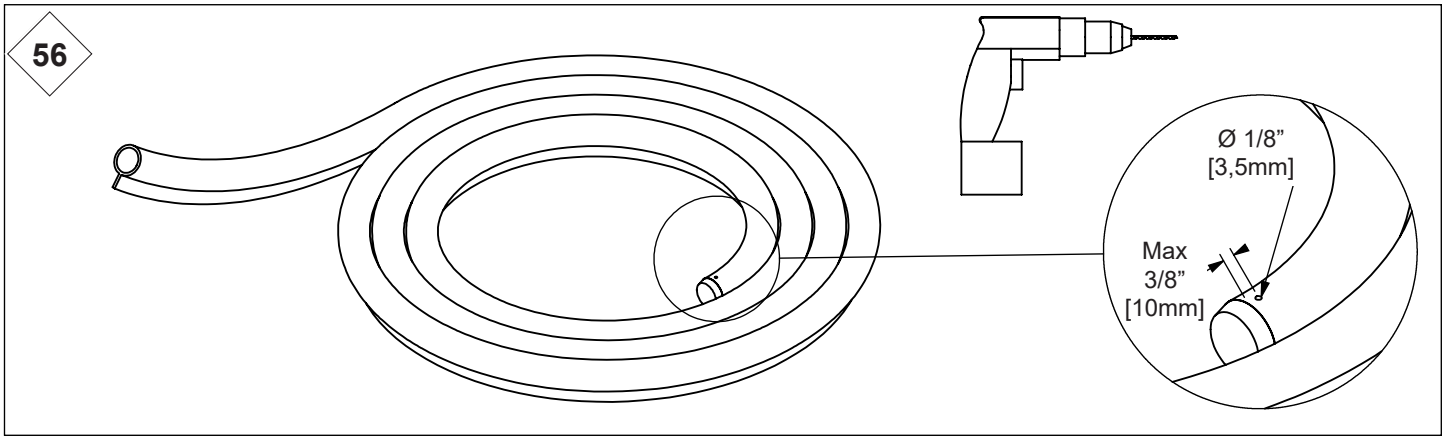
56
Ø 1/8”
[3,5mm]
Max
3/8”
[10mm]

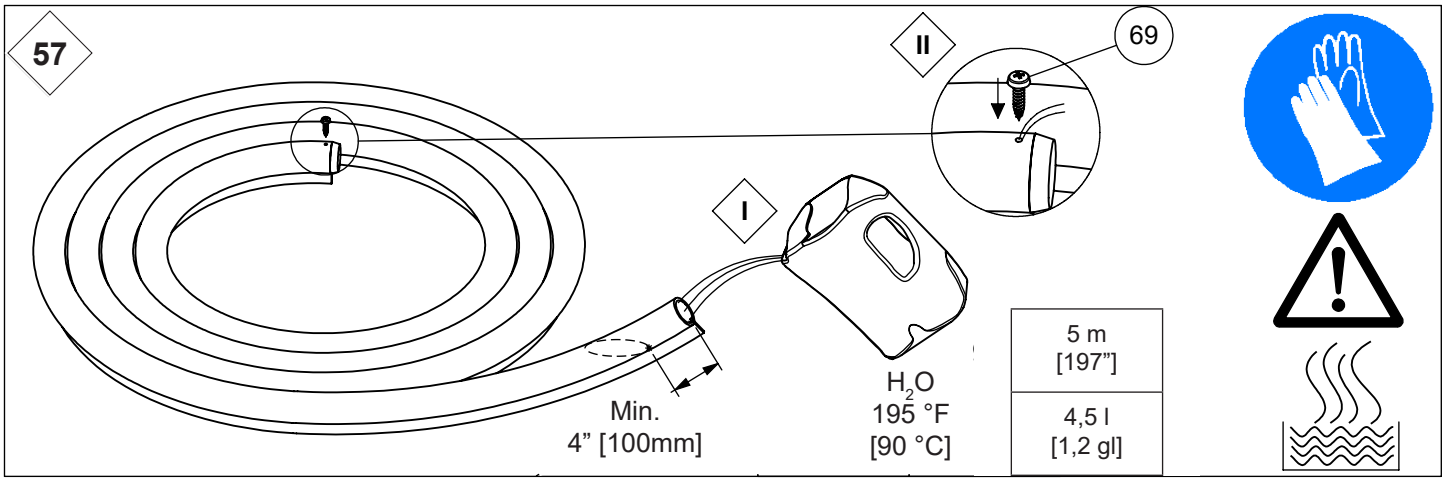
57
II
69
I
Min.
4” [100mm]
H2O
195 °F
[90 °C]
5 m
[197”]
4,5 l
[1,2 gl]

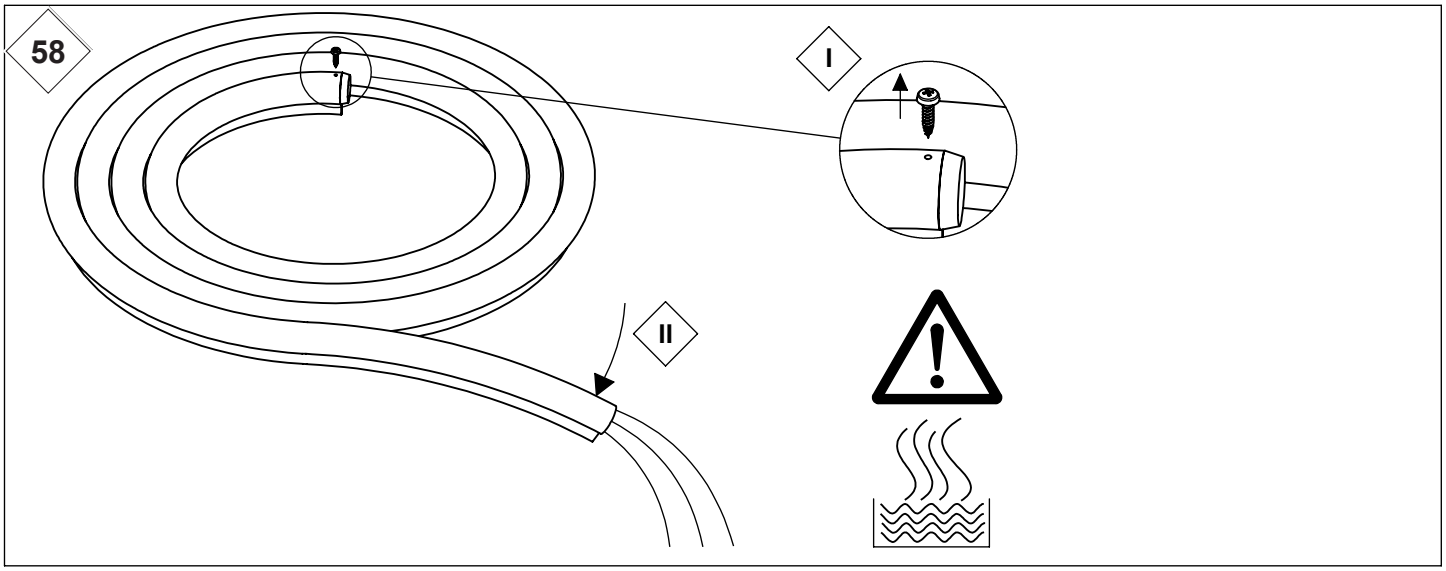
58
I
II

59

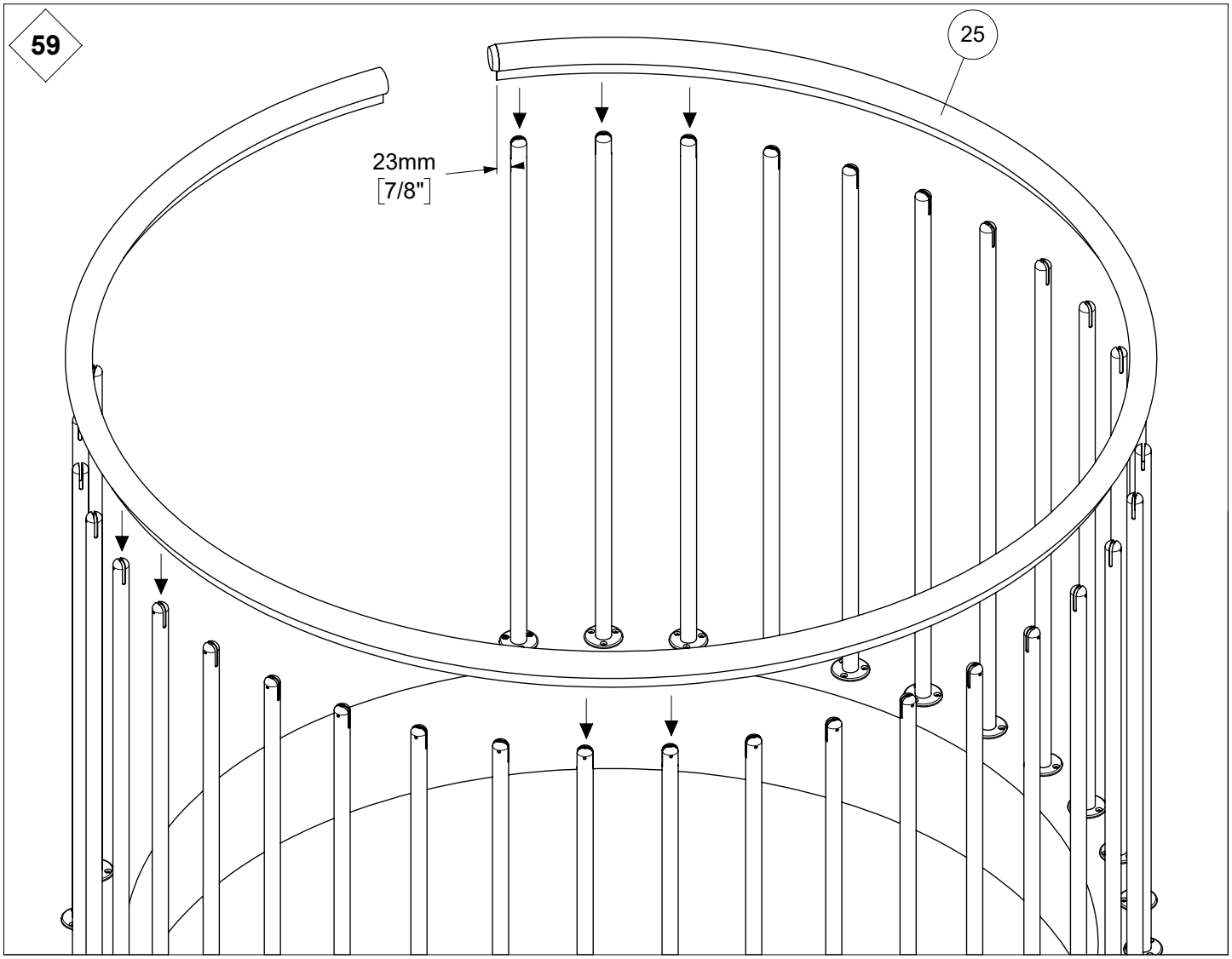

60

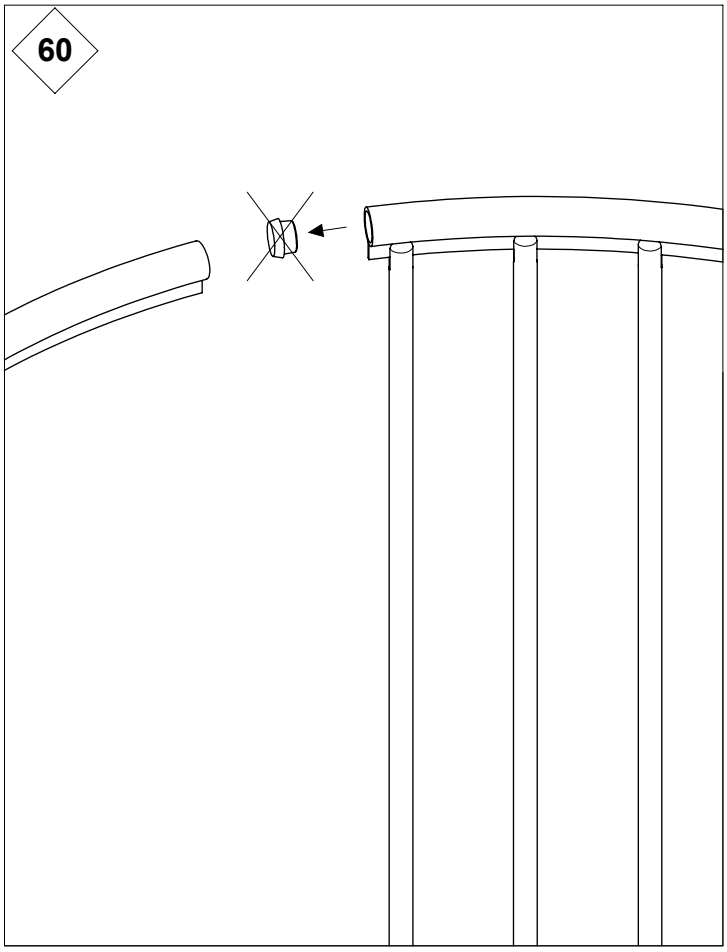

61

8"
[20 cm]

150 - 165 °F
[65 - 75 °C]

62

25mm
[1"]

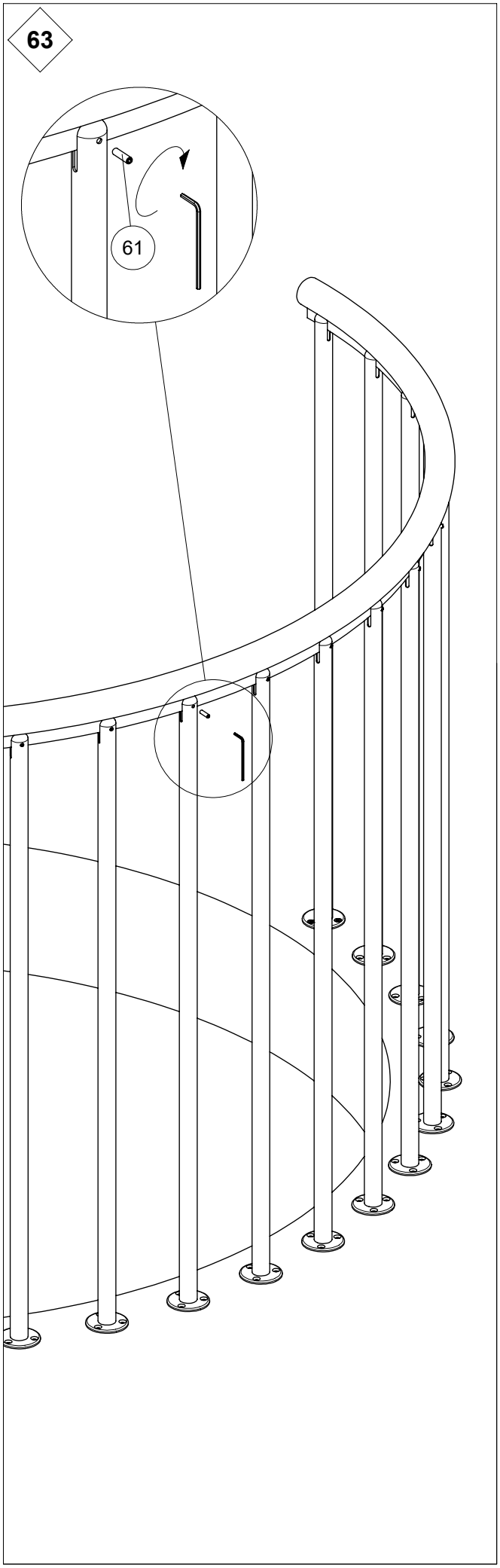

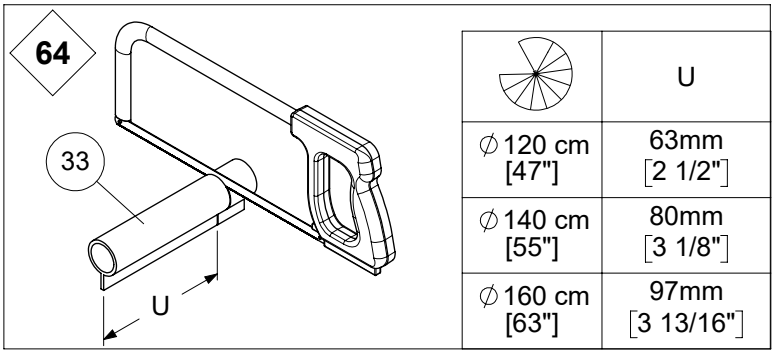

	U
∅120 cm [47"]	63mm [2 1/2"]
∅140 cm [55"]	80mm [3 1/8"]
∅160 cm [63"]	97mm [3 13/16"]

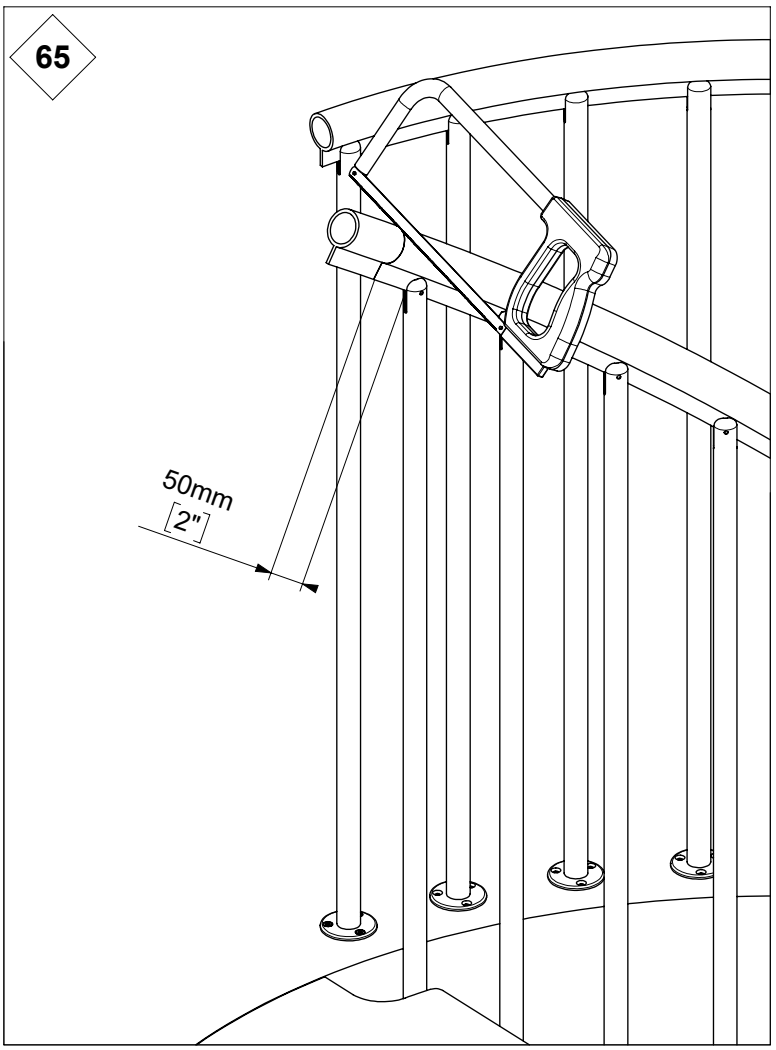

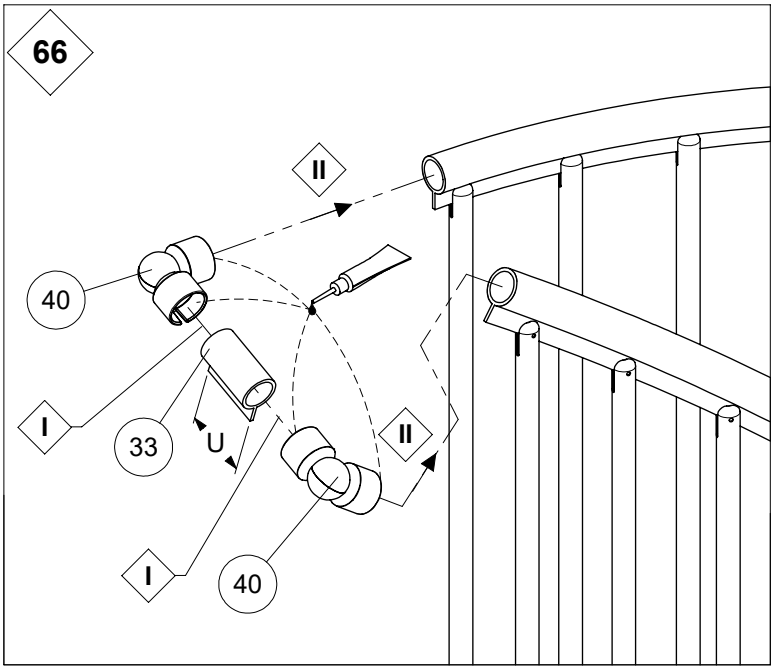

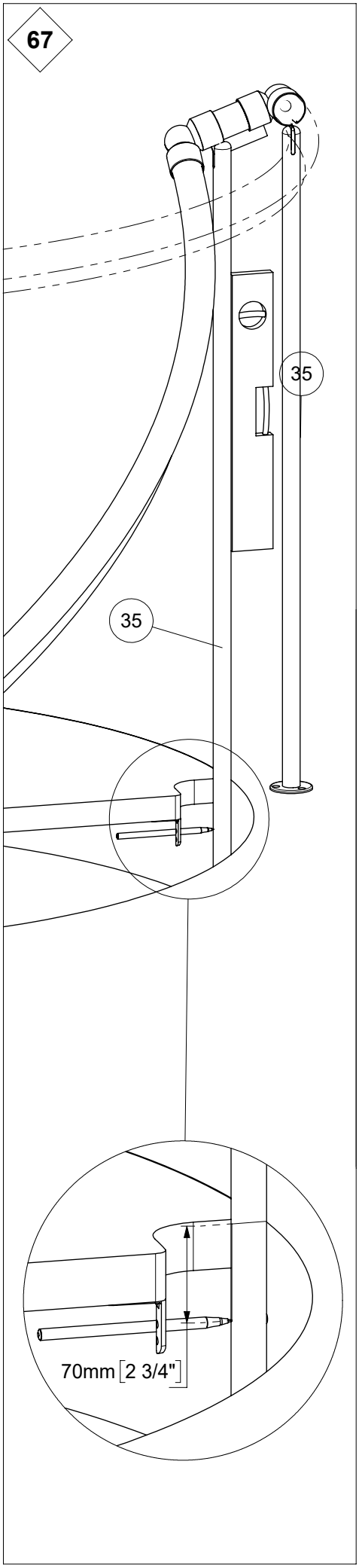
67
35
35
70mm [2 3/4"]

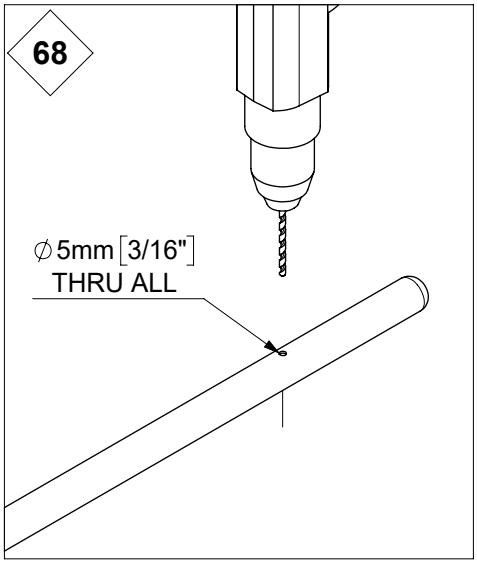
68
∅5mm [3/16"]
THRU ALL

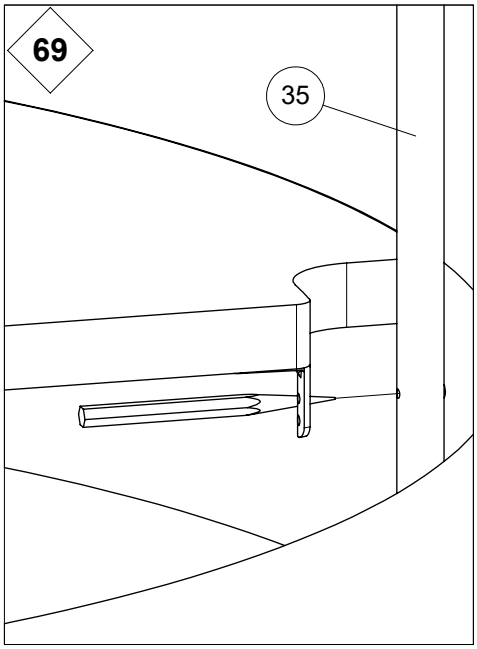
69
35

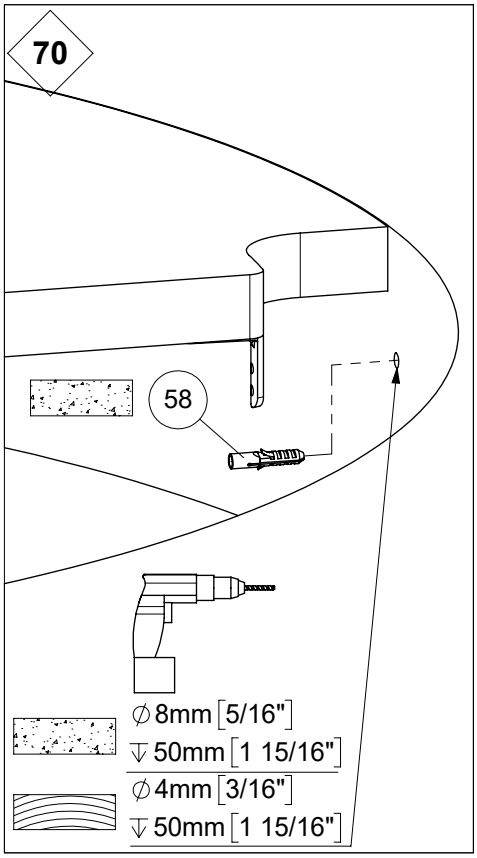
70
58
∅8mm [5/16"]
⊽50mm [1 15/16"]
∅4mm [3/16"]
⊽50mm [1 15/16"]

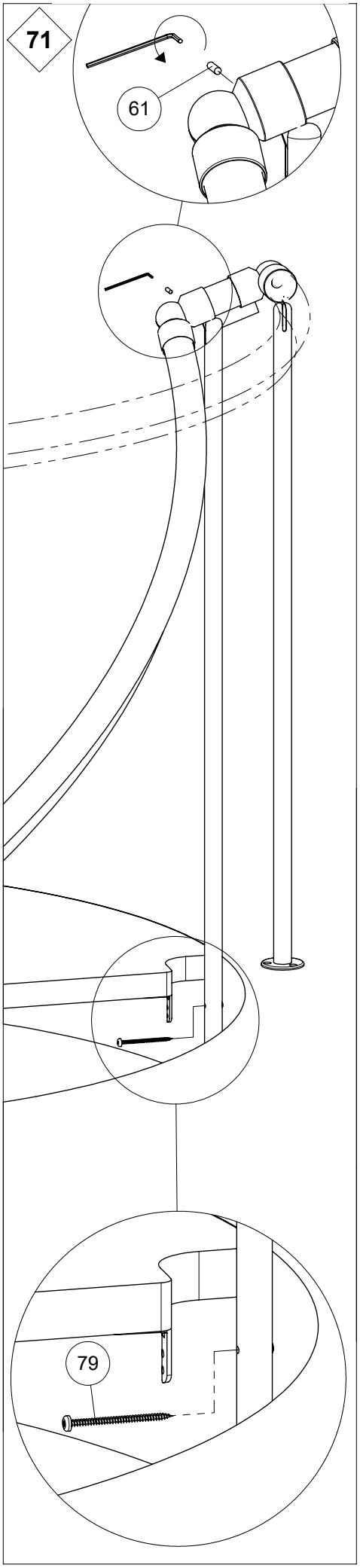
71
61
79

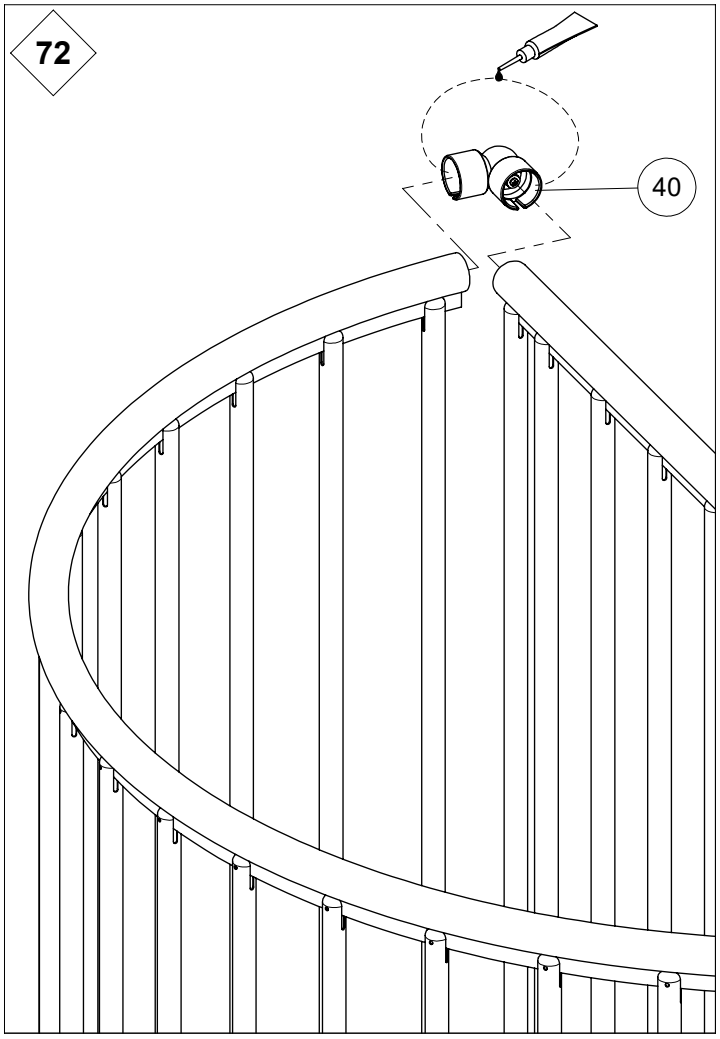
72
40

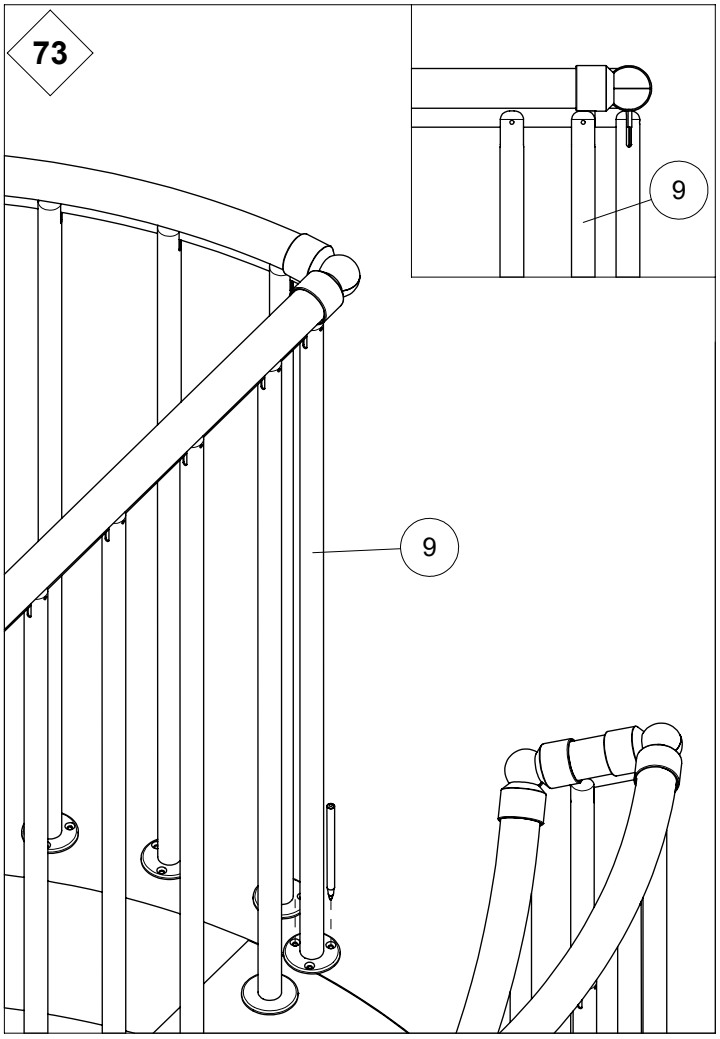
73
9
9

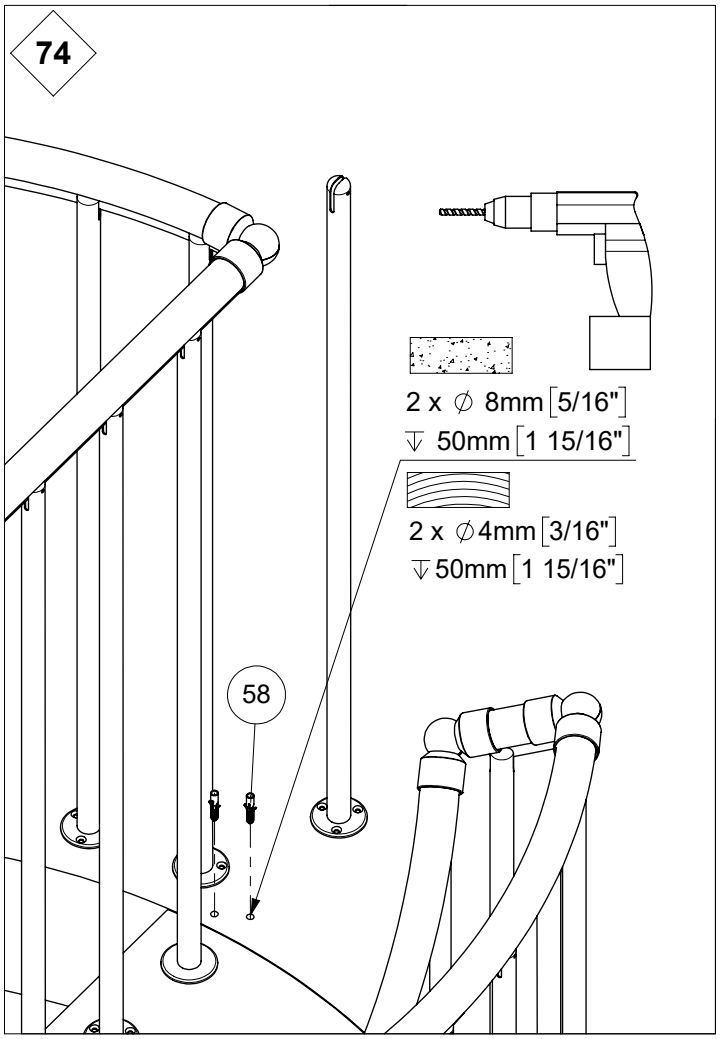
74
2 x ∅ 8mm [5/16"]
↓ 50mm [1 15/16"]
2 x ∅4mm [3/16"]
↓50mm [1 15/16"]
58

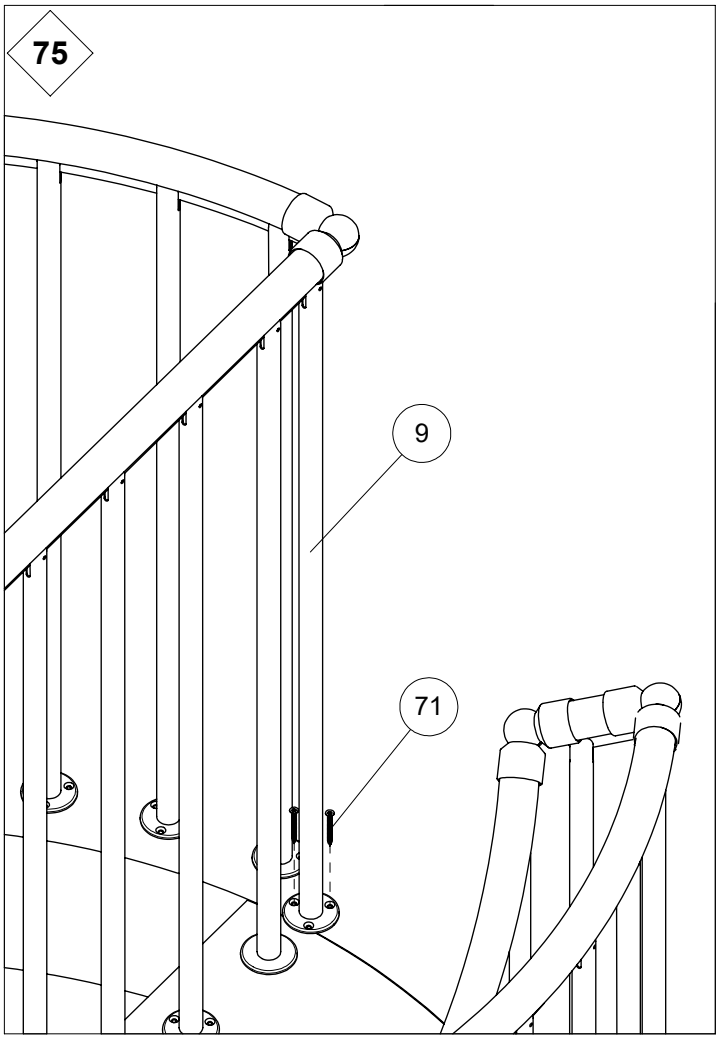
75
9
71

76

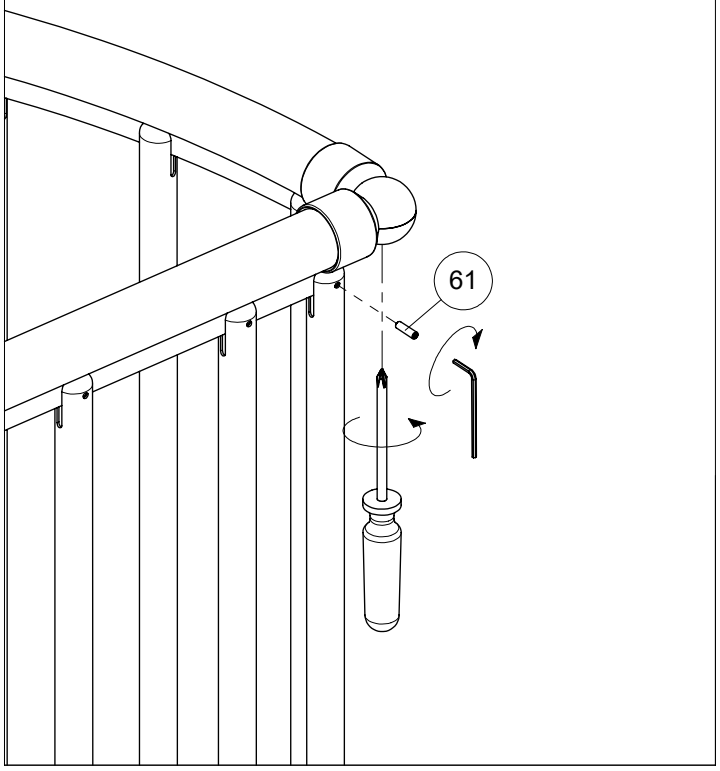

77

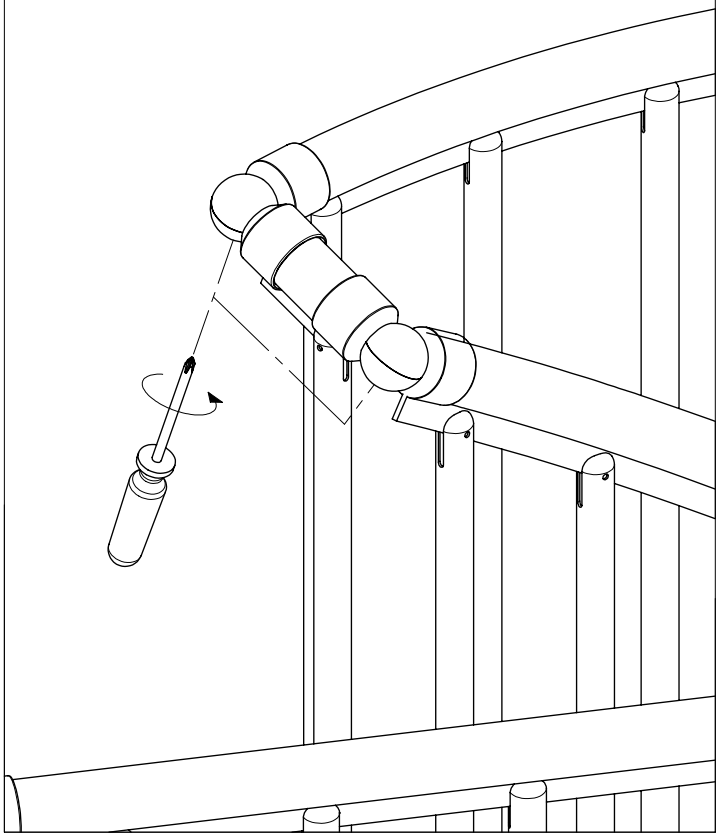
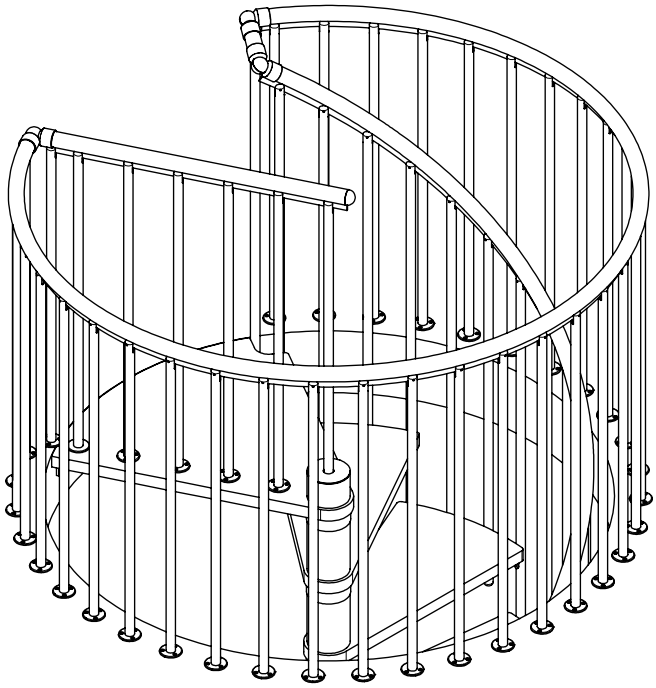
78