PS 200

1,5 m

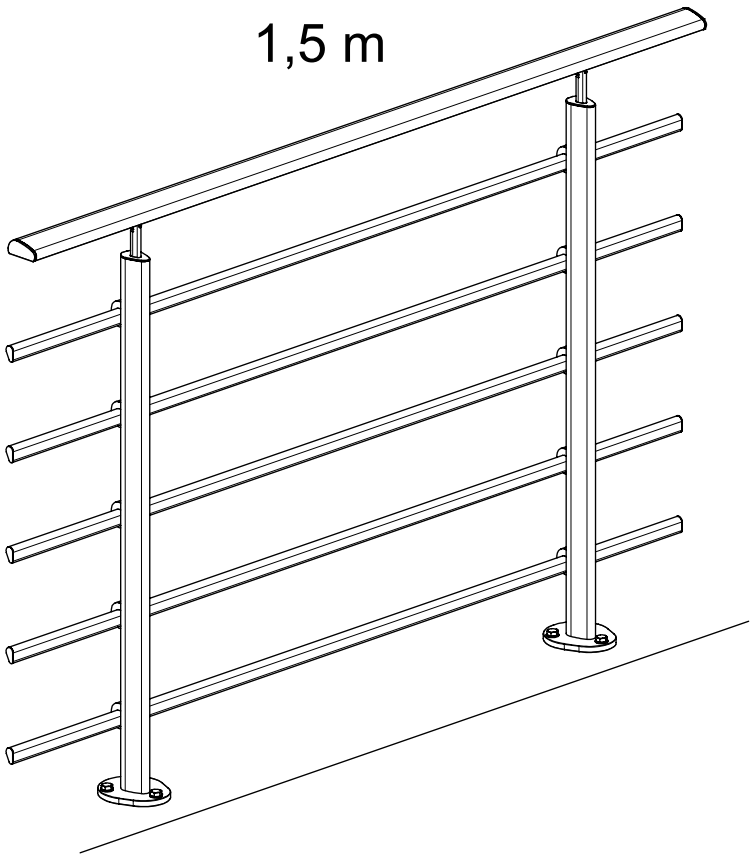

OPTION

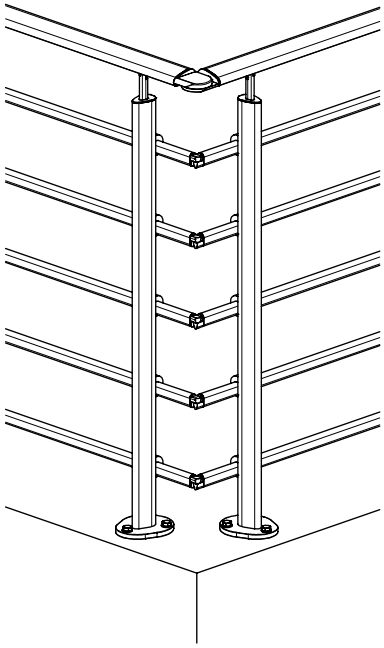

1

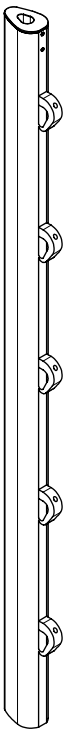

x 2
K2-1085001

2

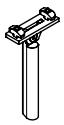

x 2
K2-1085018

3

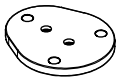

x 2
K1-1085011

4

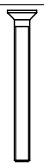

x 4
K3-02155
M10 x 100

7

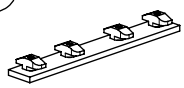

x 1
K2-1085040

8

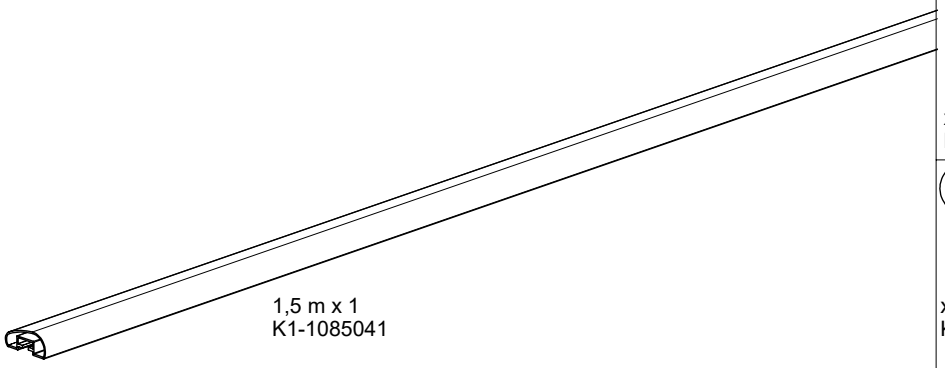

1,5 m x 1
K1-1085041

9

Droite
Rechts

Derecha

x 1
K2-1085048

10

Gauche
Links
Izquierda

x 1
K2-1085049

11

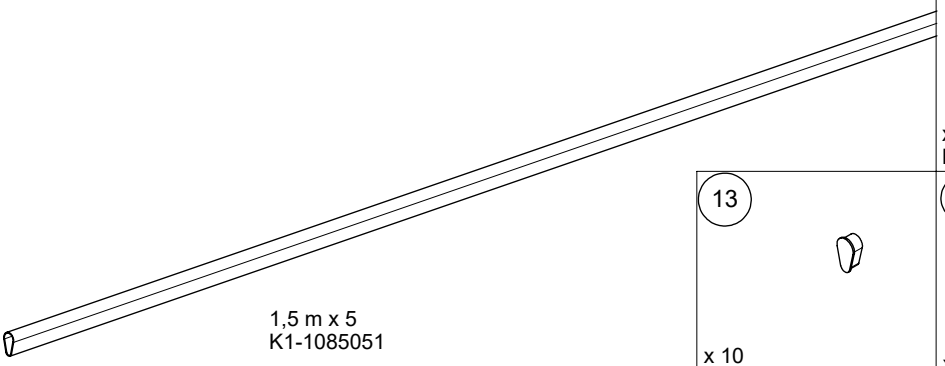

1,5 m x 5
K1-1085051

12

x 5
K1-1085059

13

x 10
K1-1085058

14

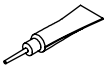

x 1
K3-90001

PS 202
OPTION

20

x 1
K2-1085060

21

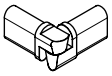

x 5
K2-1085062

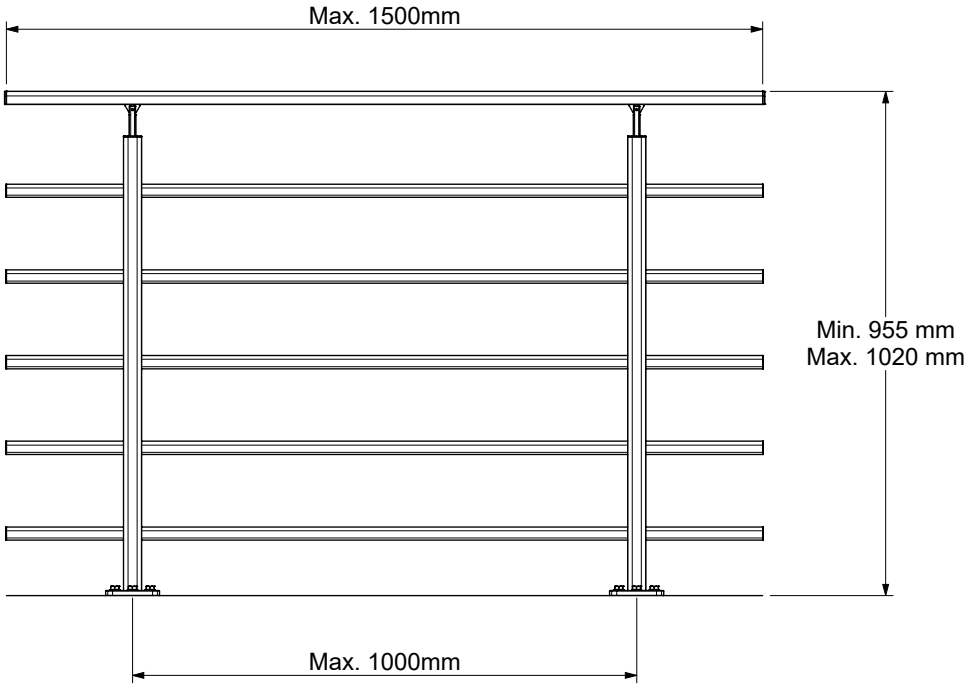
Max. 1500mm
Min. 955 mm
Max. 1020 mm
Max. 1000mm

1

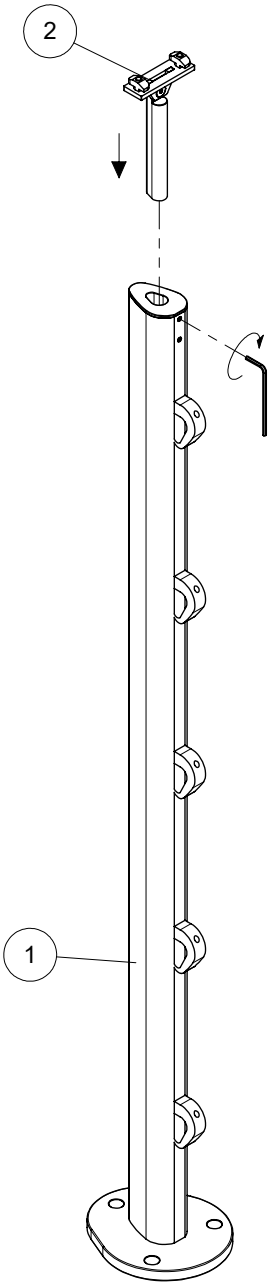

2

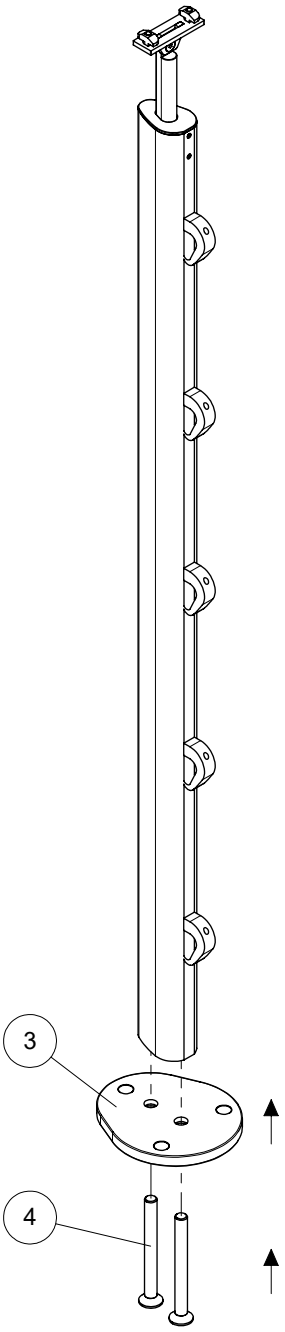

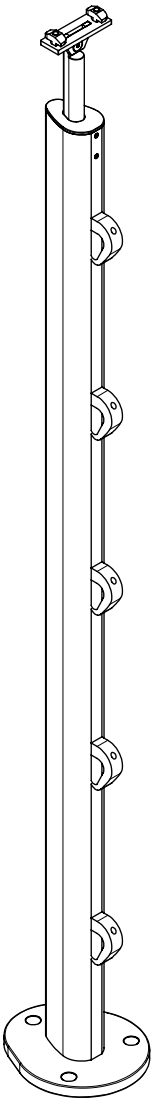

3 Alt A

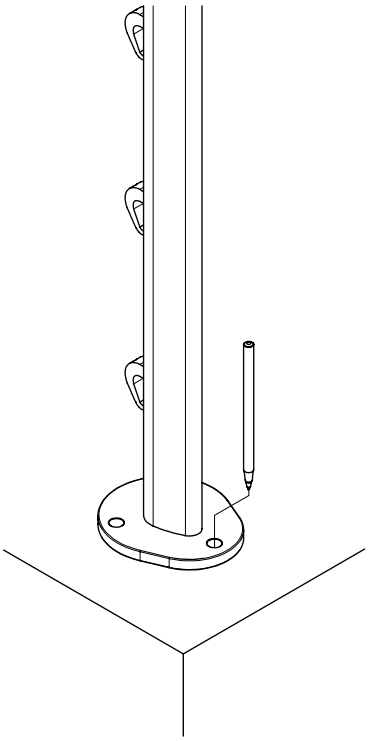

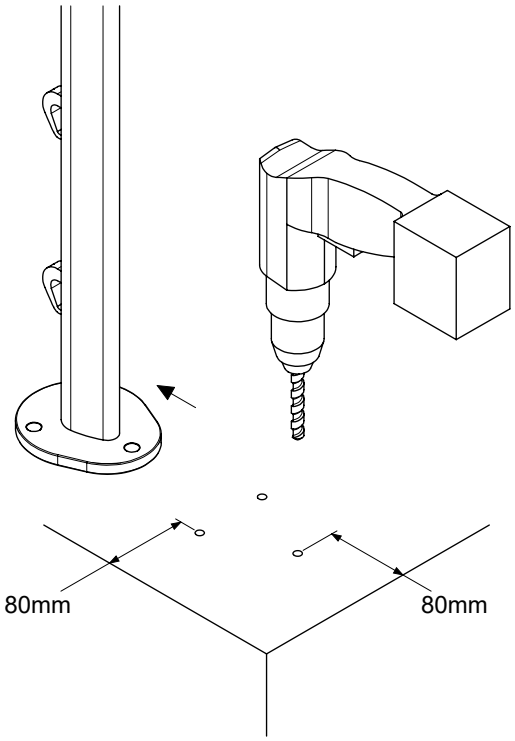

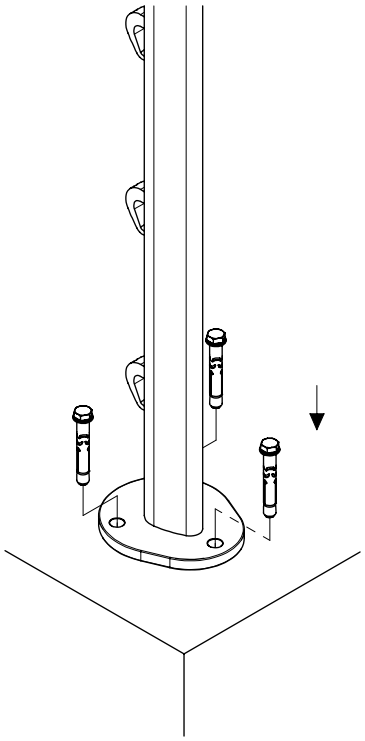

3 Alt B

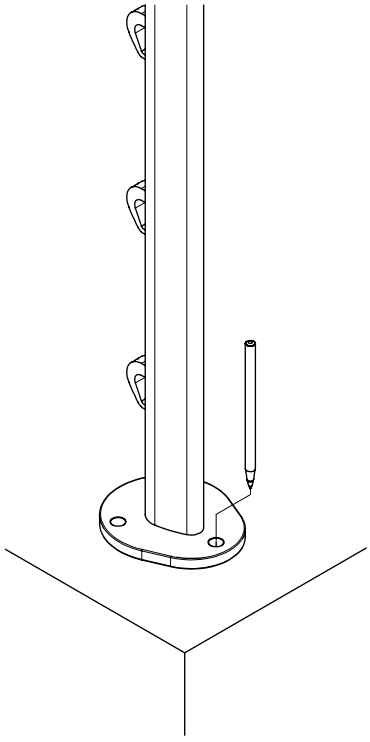

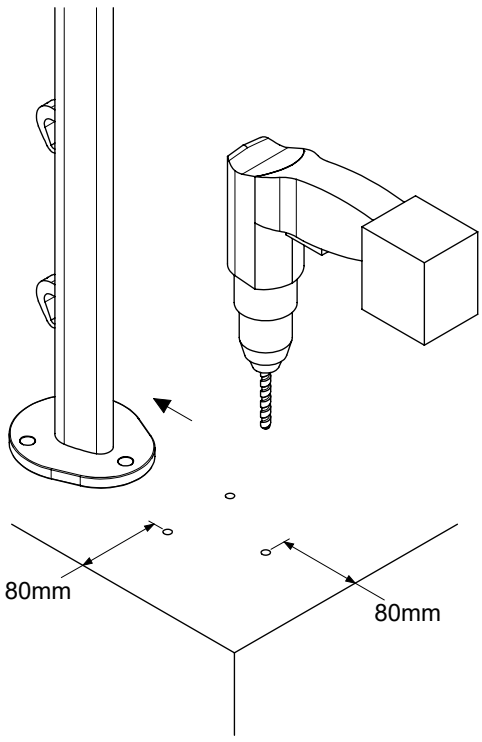

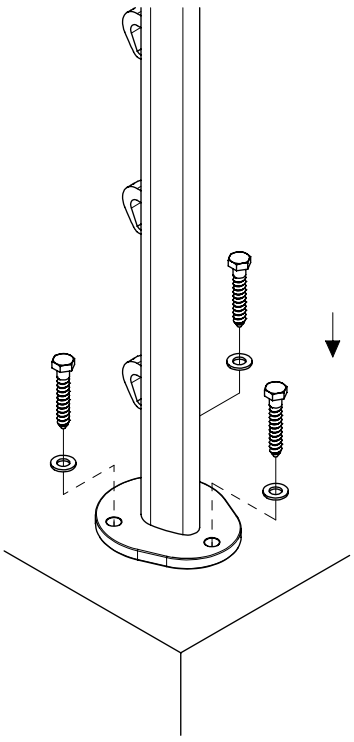

4

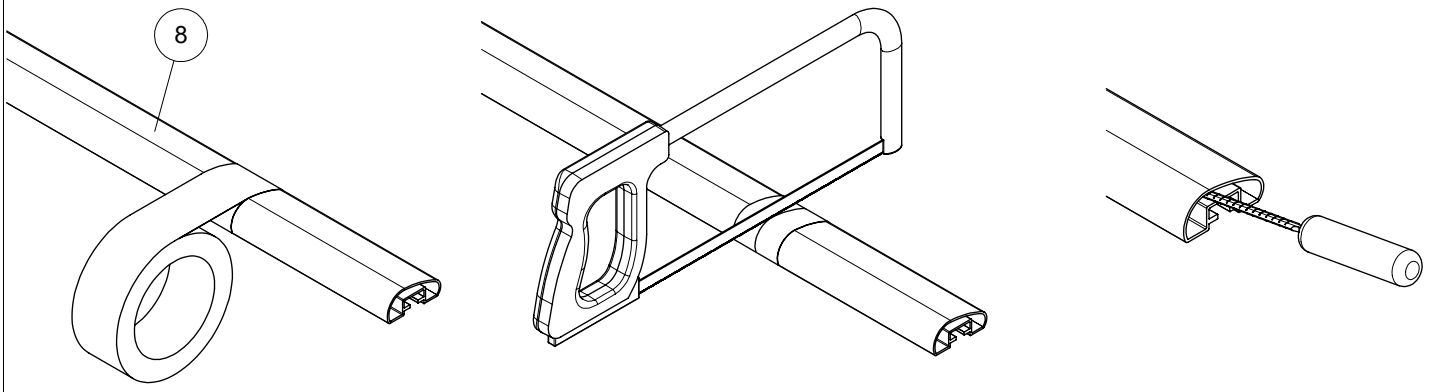

5

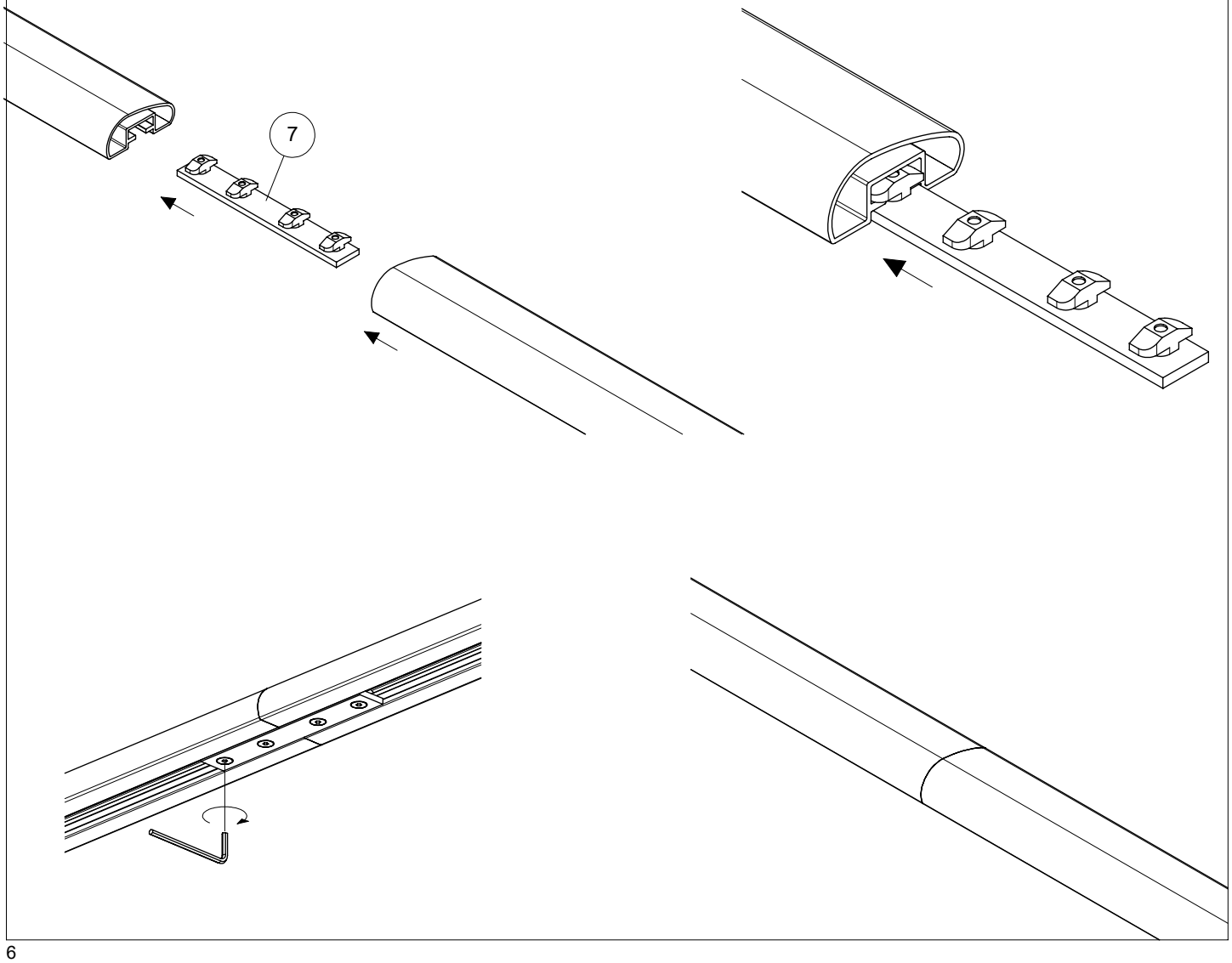

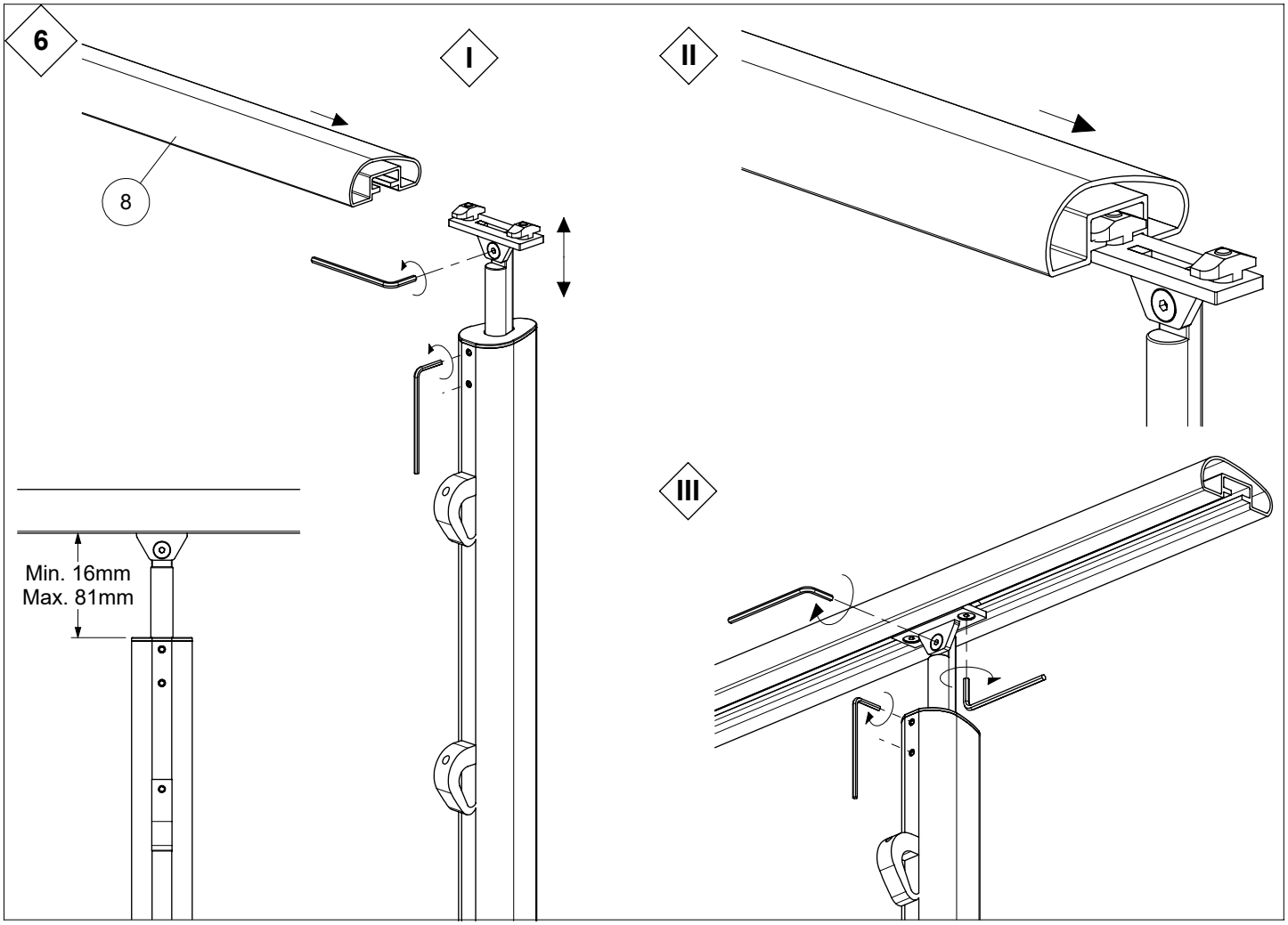
6
I
8
II
Min. 16mm
Max. 81mm
III

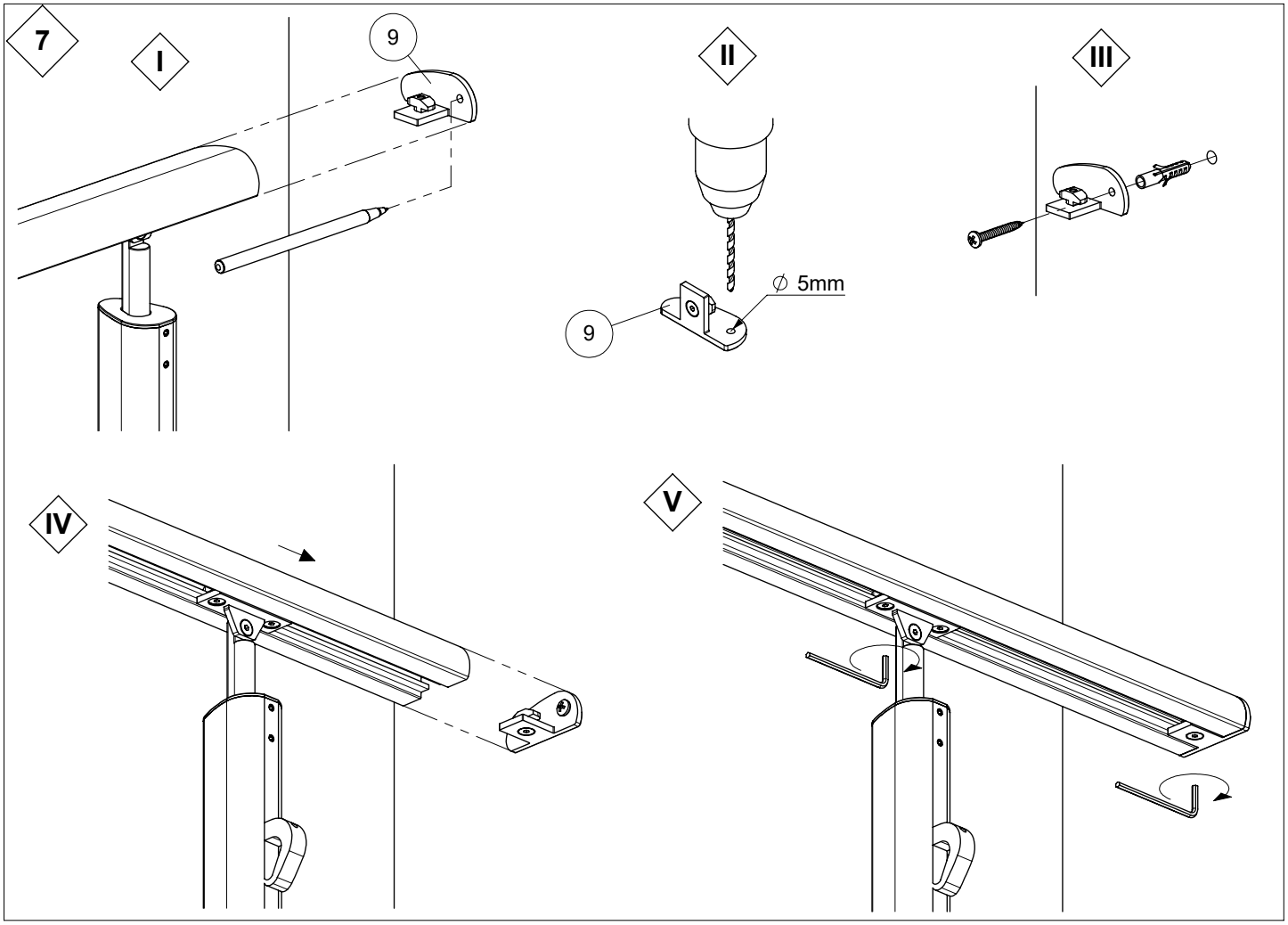
7
I
9
II
III
∅ 5mm
9
IV
V

8

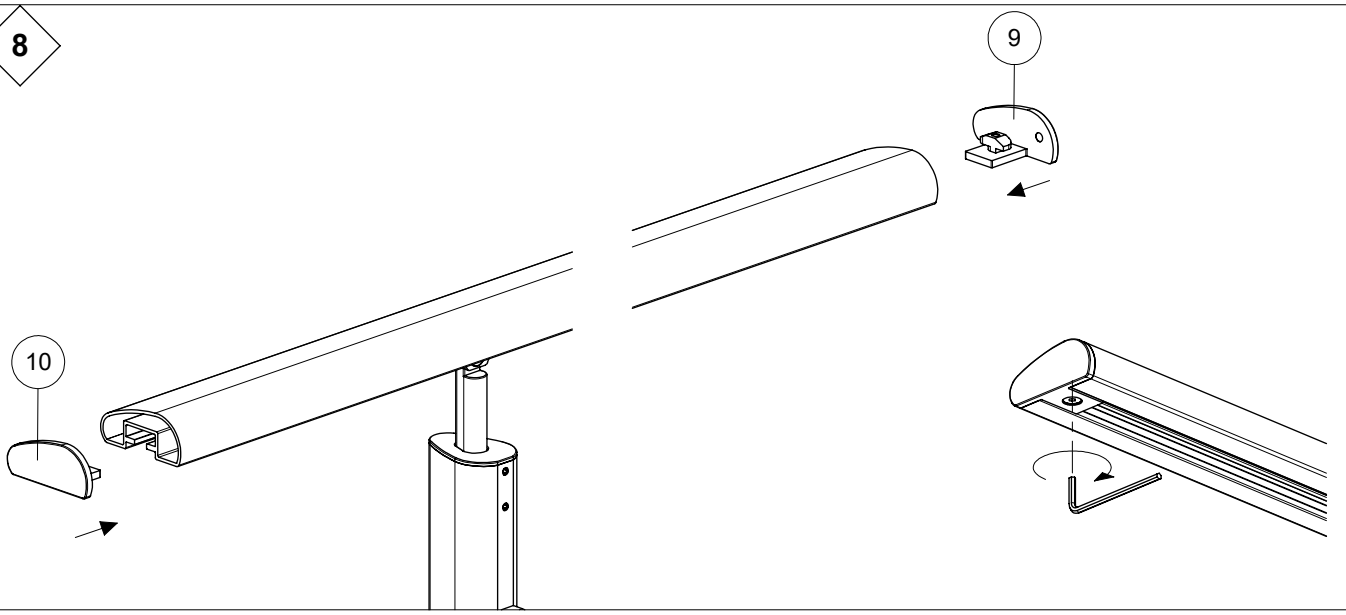

9

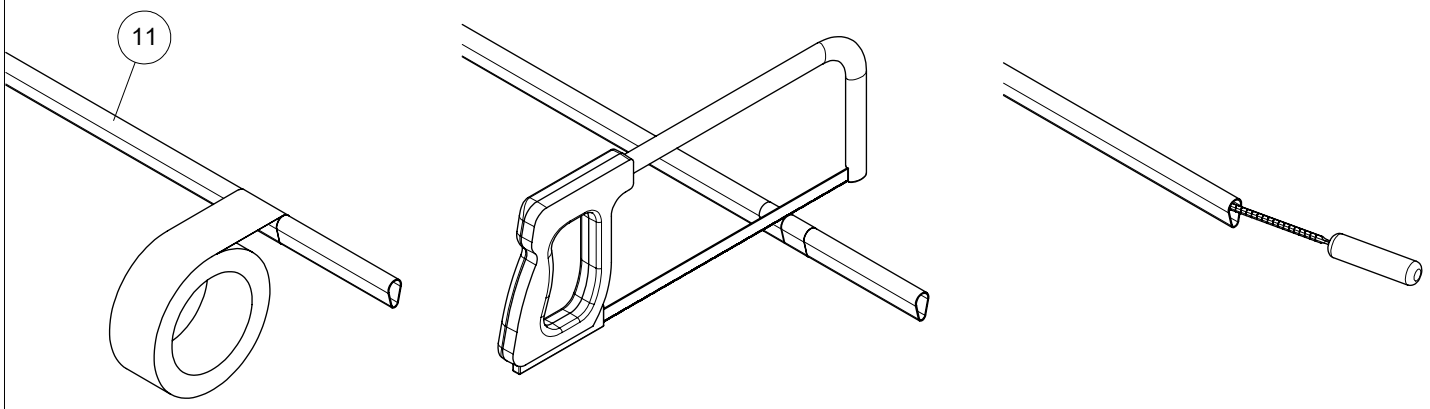

10

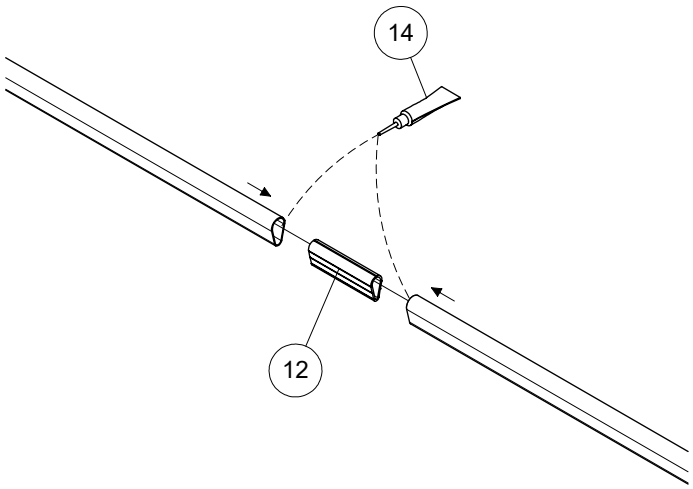

11

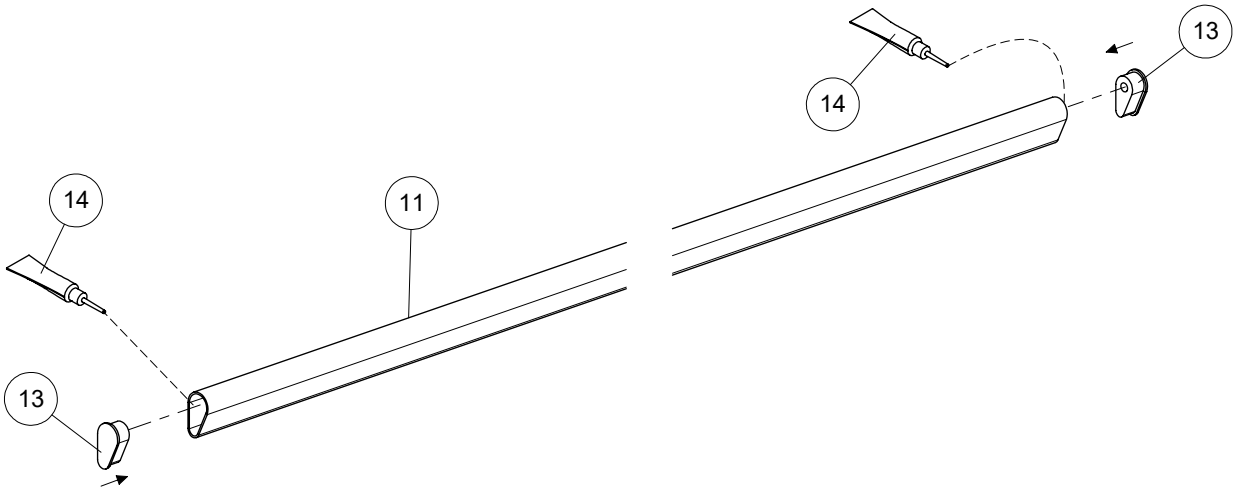

12

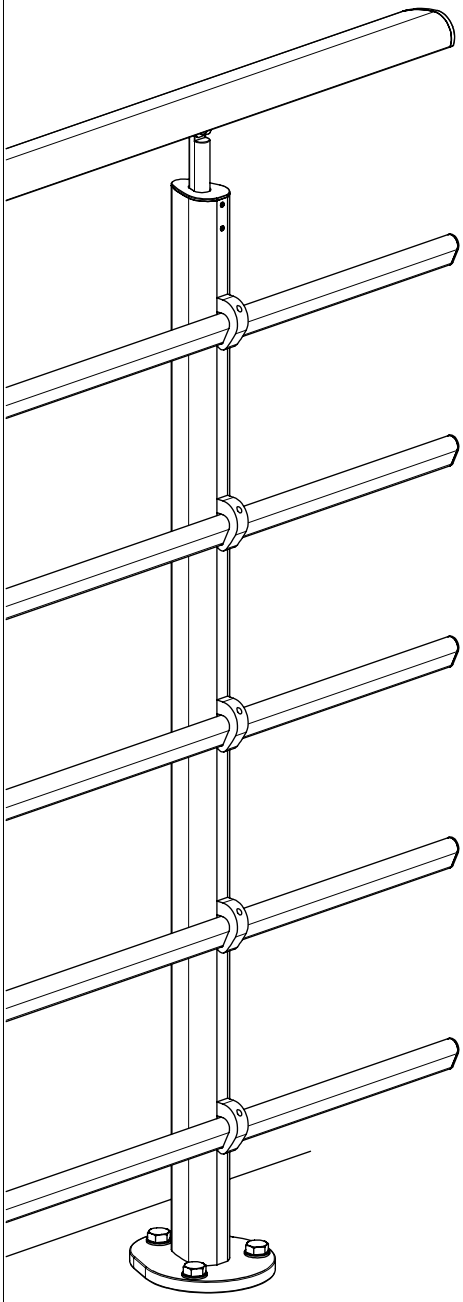

I

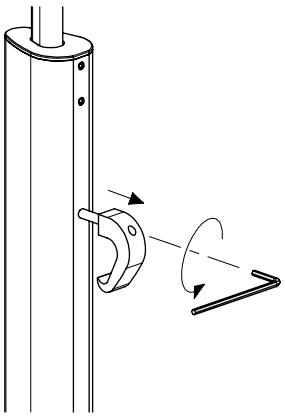

II

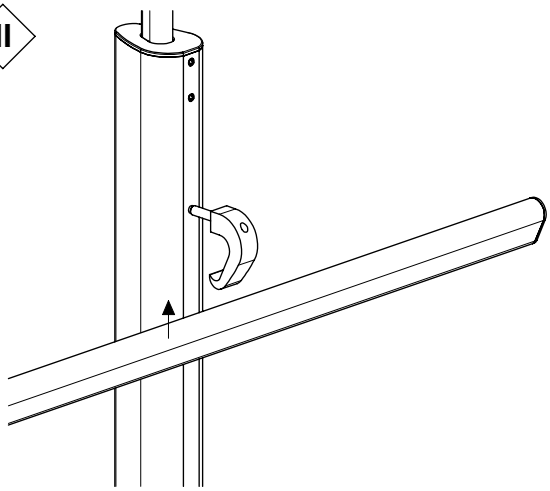

III

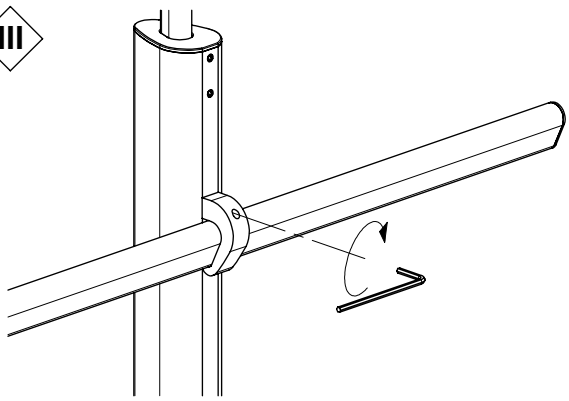

13 OPTION

PS 202

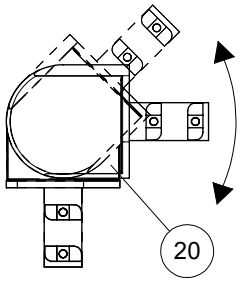

I

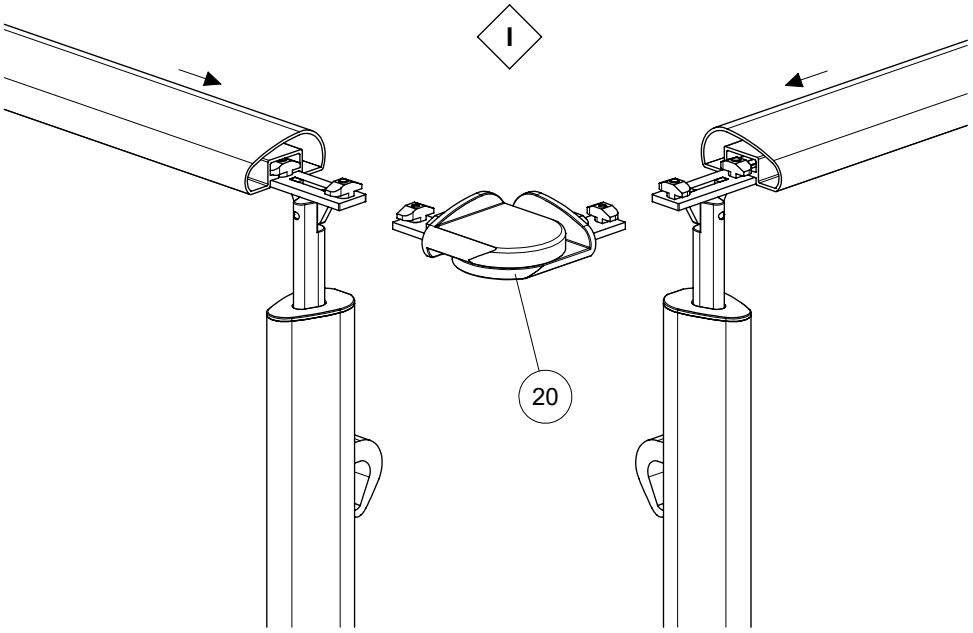

II

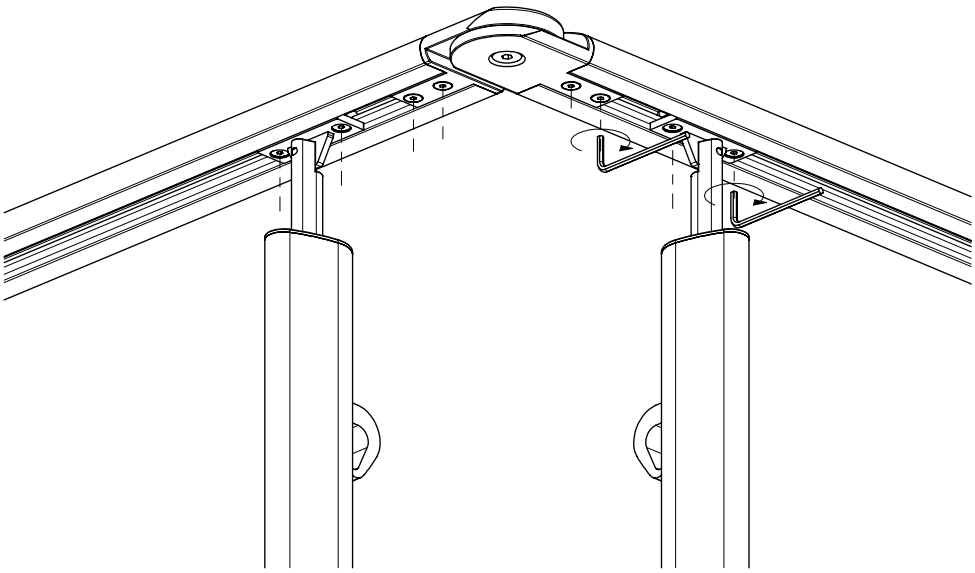

III

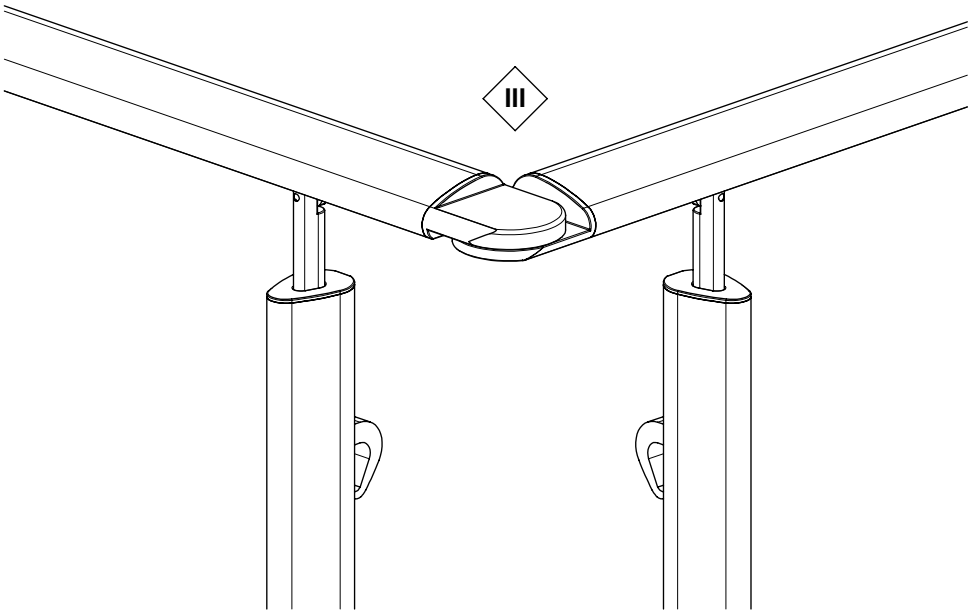

14 OPTION

21

PS 202

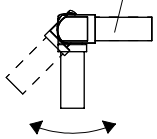

I

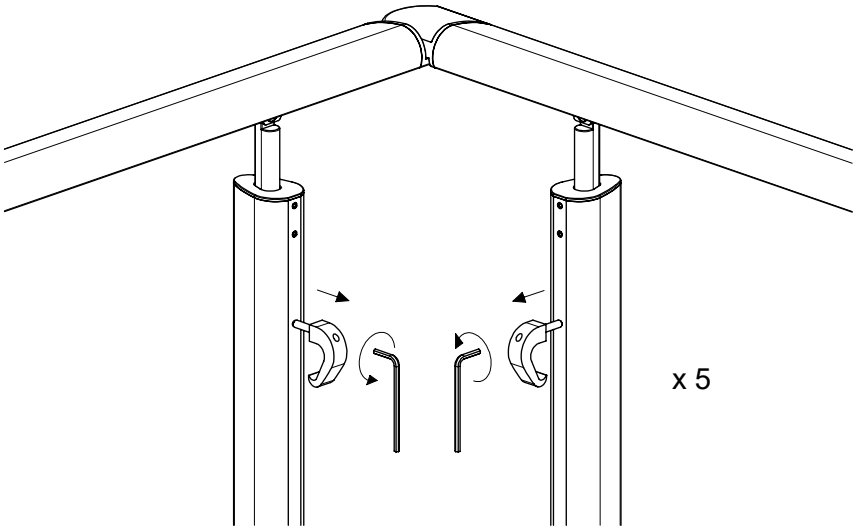

x 5

II

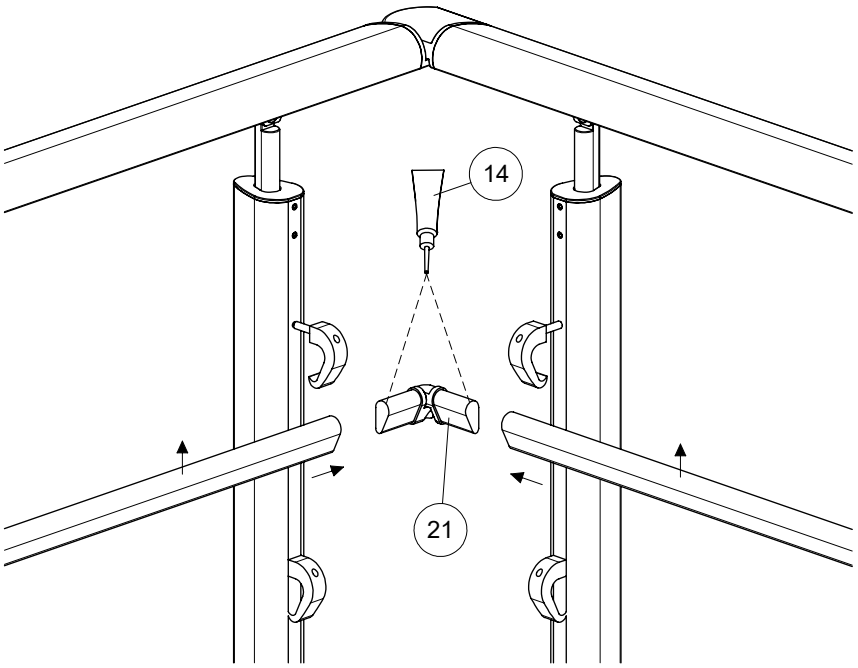

x 5

III

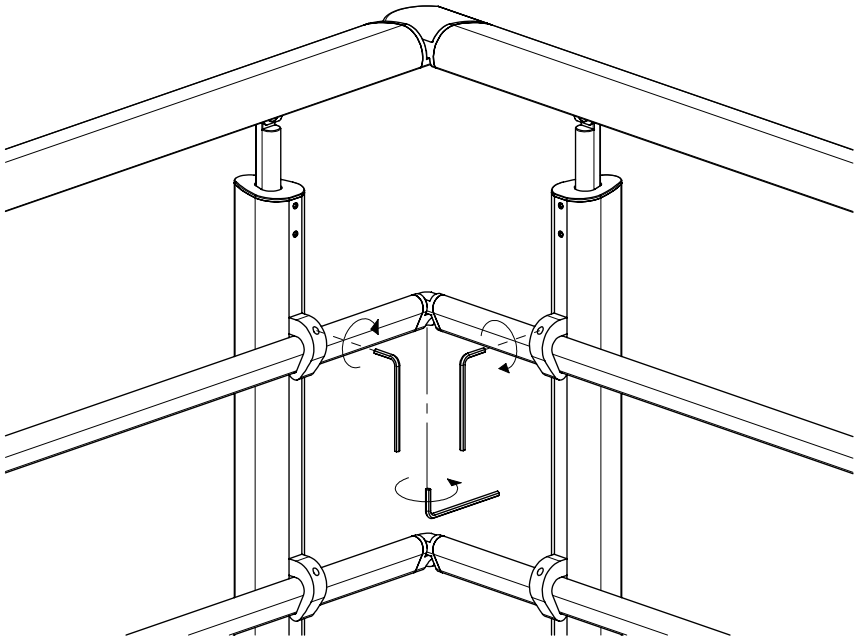

x 5