DOLLE

Einbauanleitung - Spindeltreppe Valencia - Handlauf rund

Installation instruction - Valencia

Notice de montage Valencia

Montagevejledning Valencia

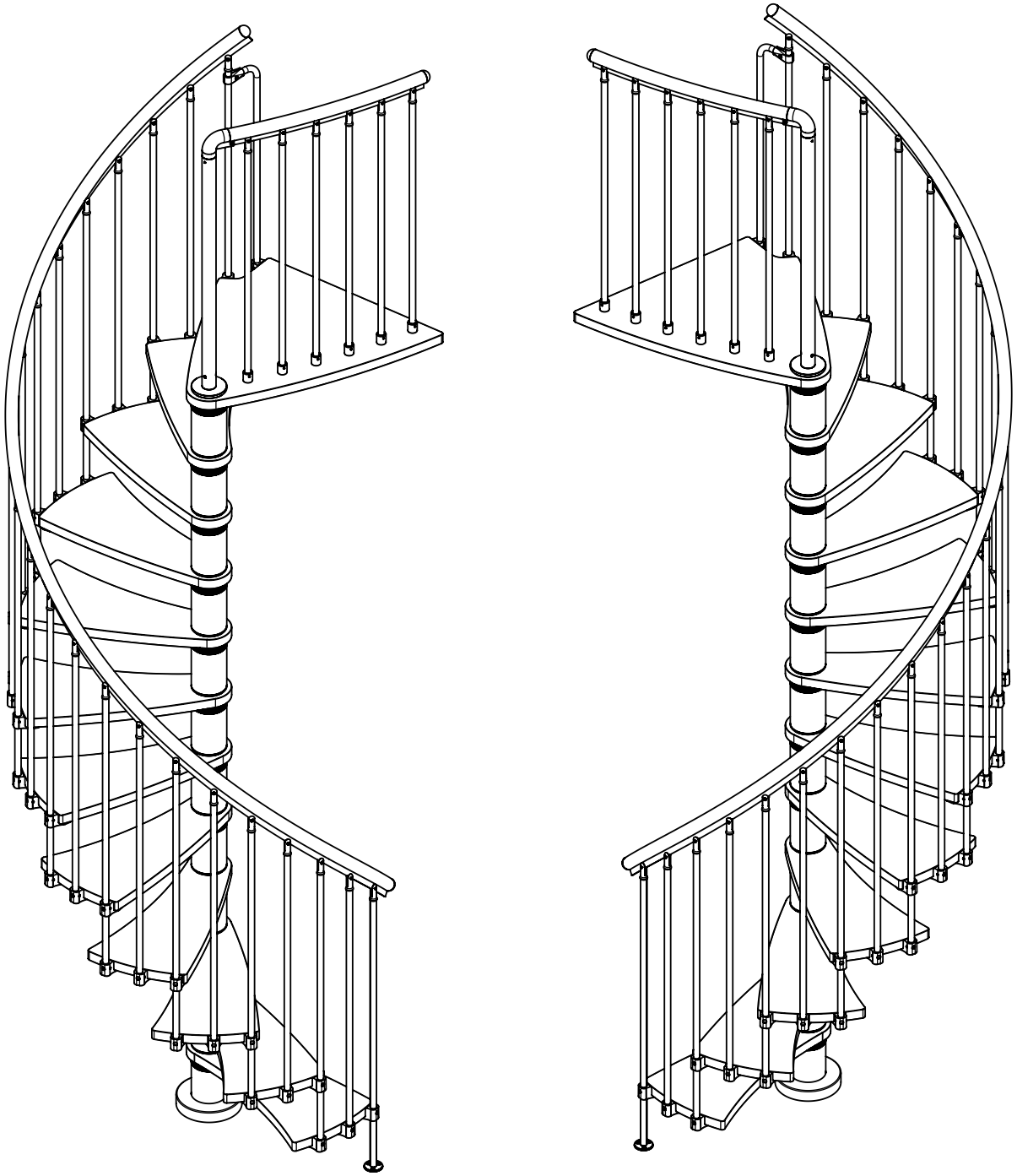

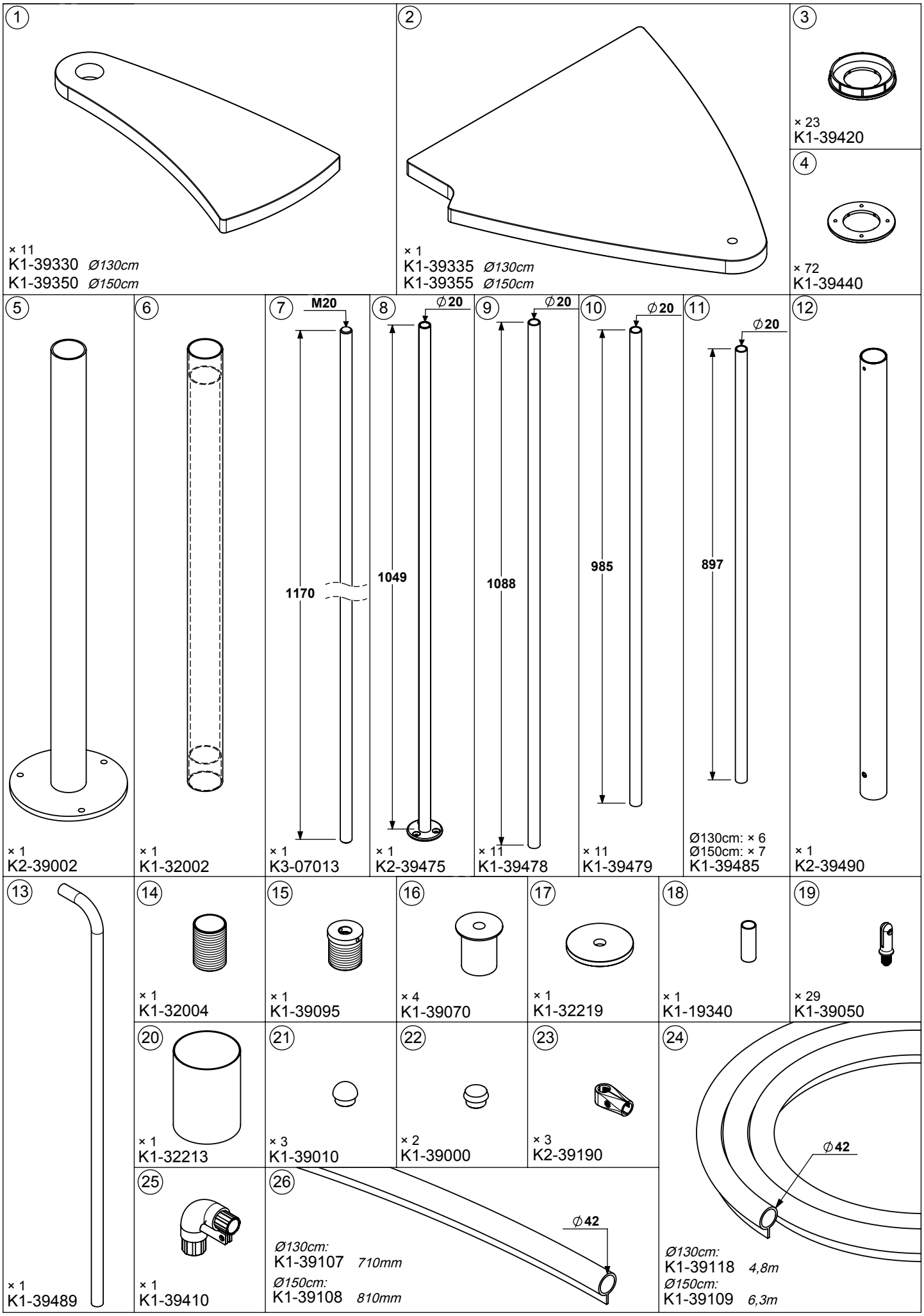
1
× 11
K1-39330 Ø130cm
K1-39350 Ø150cm
2
× 1
K1-39335 Ø130cm
K1-39355 Ø150cm
3
× 23
K1-39420
4
× 72
K1-39440
5
× 1
K2-39002
6
× 1
K1-32002
7
M20
1170
× 1
K3-07013
8
∅20
1049
× 1
K2-39475
9
∅20
1088
× 11
K1-39478
10
∅20
985
× 11
K1-39479
11
∅20
897
Ø130cm: × 6
Ø150cm: × 7
K1-39485
12
× 1
K2-39490
13
× 1
K1-39489
14
× 1
K1-32004
15
× 1
K1-39095
16
× 4
K1-39070
17
× 1
K1-32219
18
× 1
K1-19340
19
× 29
K1-39050
20
× 1
K1-32213
21
× 3
K1-39010
22
× 2
K1-39000
23
× 3
K2-39190
24
∅42
Ø130cm:
K1-39118 4,8m
Ø150cm:
K1-39109 6,3m
25
× 1
K1-39410
26
∅42
Ø130cm:
K1-39107 710mm
Ø150cm:
K1-39108 810mm

27 × 1 K1-39414	28 × 2 K2-19210	29 × 35 K1-19161	30 Ø130cm: × 6 Ø150cm: × 7 K1-39484	31 × 3 K1-19350	32 × 3 K1-19310	
50 × 3 K3-06070 *Ø10×60*	51 × 3 K3-04040 *Ø10*	52 × 3 K3-08001 *Ø12×60*	53 × 2 K3-05021 *M8×10*	54 × 2 K3-03024 *M20*	55 × 2 K3-04020 *Ø20*	56 × 1 K3-05055 *M6×5*
57 × 9 K3-08002 *Ø8×40*	58 Ø130cm: × 6 Ø150cm: × 7 K3-06022 *Ø5×35*	59 Ø130cm: × 30 Ø150cm: × 31 K3-03020 *M5*	60 Ø130cm: × 30 Ø150cm: × 31 K3-01001 *M5×14*	61 × 5 K3-06015 *Ø8×70*	62 × 5 K3-04028 *Ø8*	63 × 5 K3-08004 *Ø10×60*
64 × 125 K3-06016 *Ø6×40*	65 × 35 K3-03030 *M6×10×10*	66 × 35 K3-05002 *M6×8*	67 × 6 K3-05166 *M6×6*	68 × 1 K3-06029 *Ø6×60*	69 × 1 R1-63272 *Ø6×25*	70 K3-90001

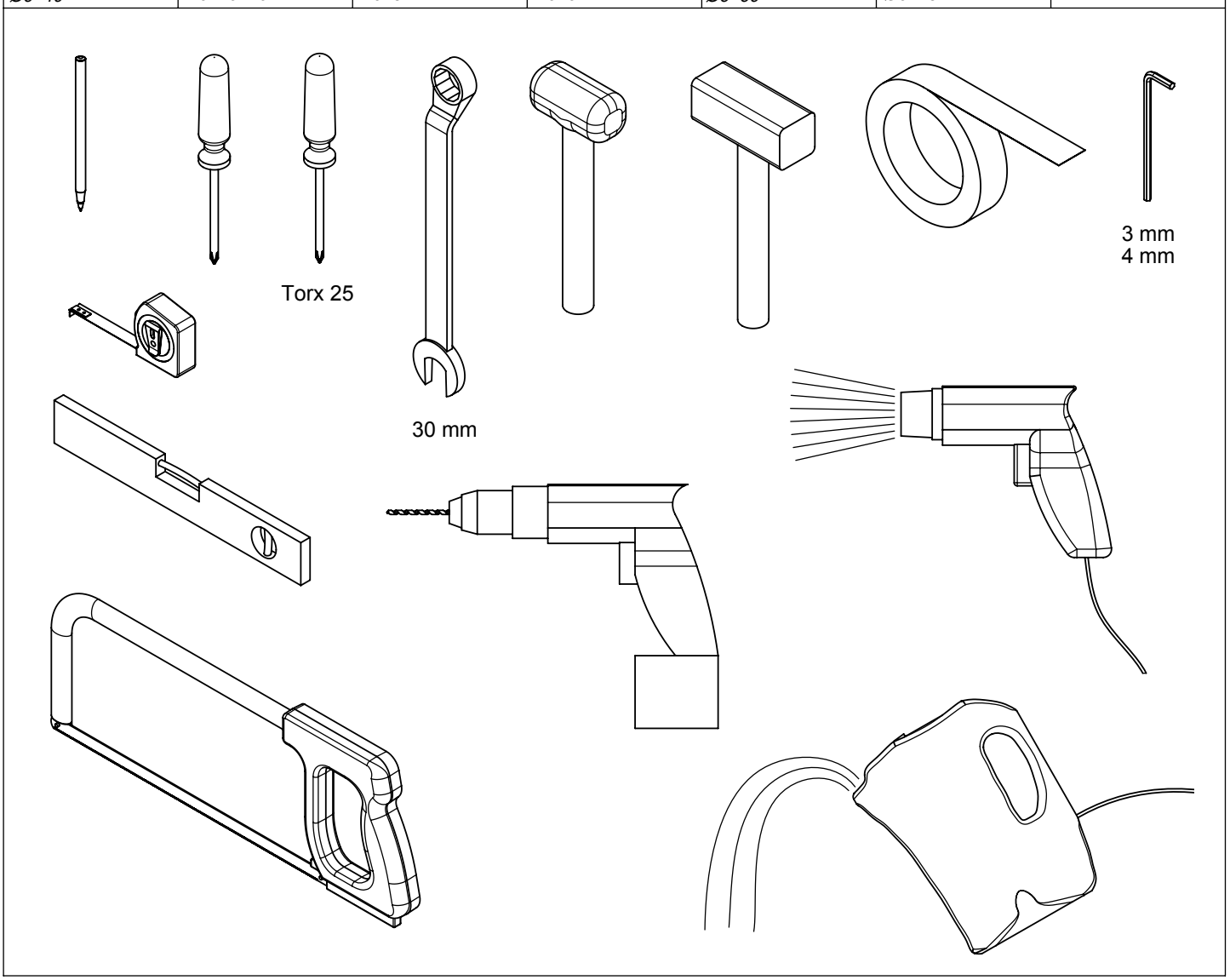

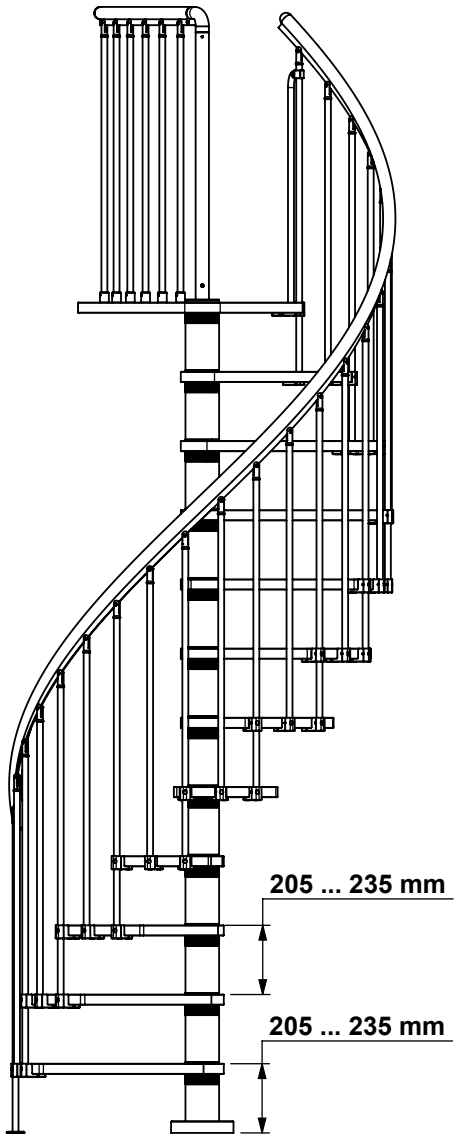

205 mm

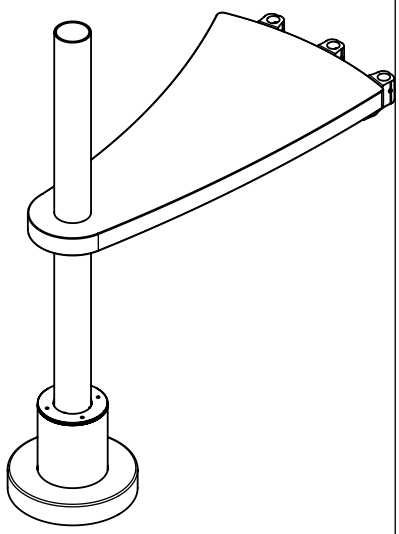

210 mm

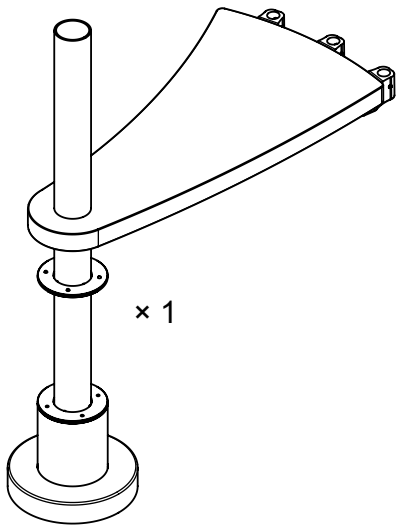

215 mm

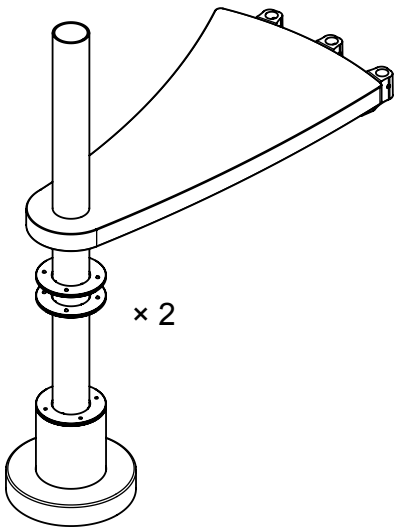

220 mm

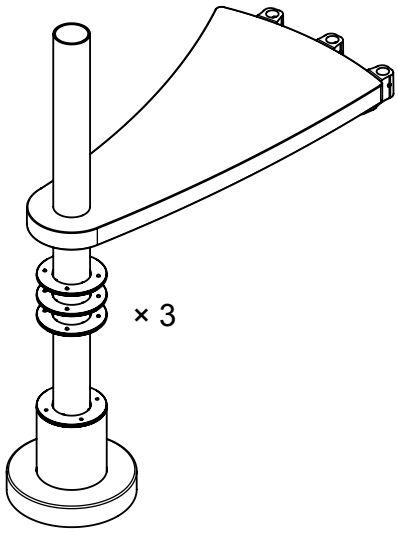

225 mm

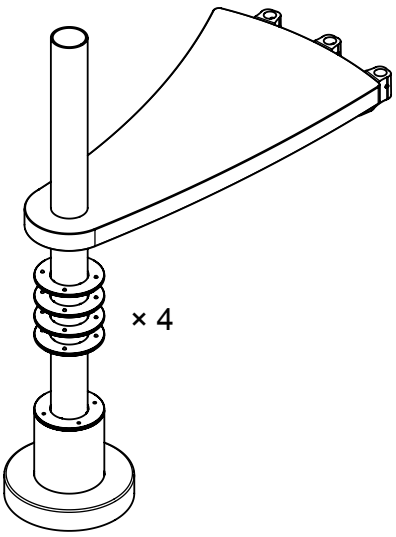

230 mm

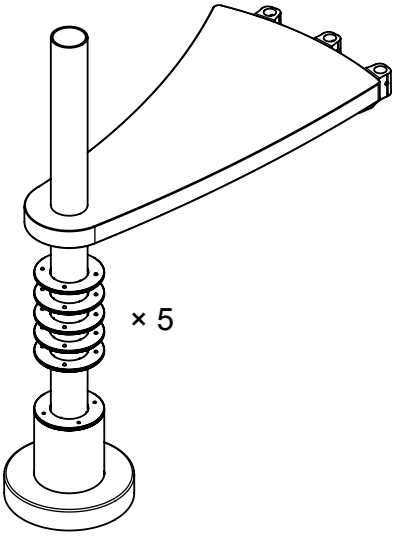

235 mm

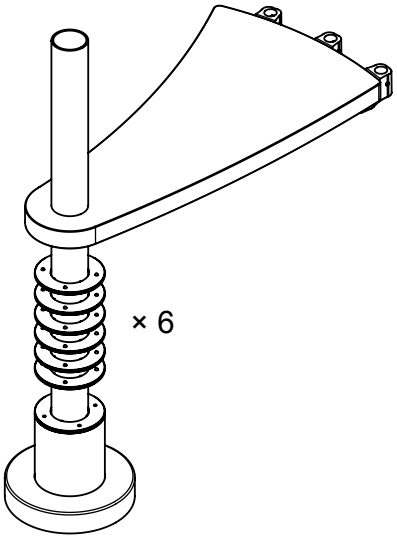

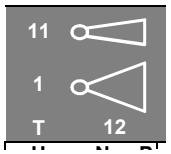

12

T

N
0...6 st (pcs)

4

P
+ 1 st (pcs)

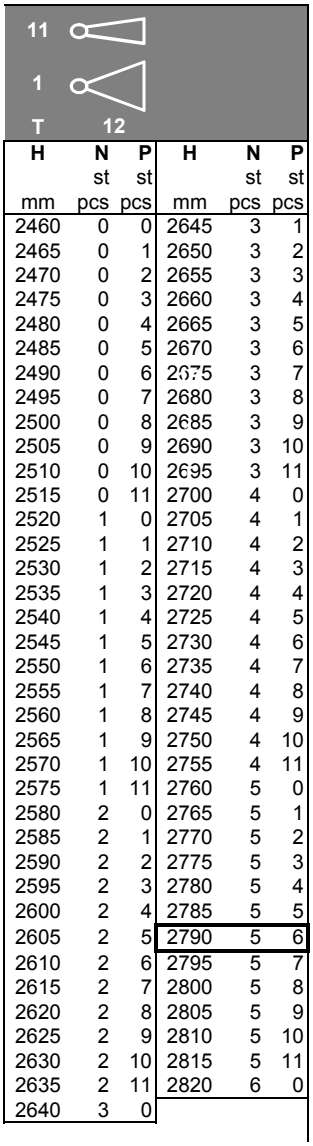

H mm	N st pcs	P st pcs	H mm	N st pcs	P st pcs
2460	0	0	2645	3	1
2465	0	1	2650	3	2
2470	0	2	2655	3	3
2475	0	3	2660	3	4
2480	0	4	2665	3	5
2485	0	5	2670	3	6
2490	0	6	2675	3	7
2495	0	7	2680	3	8
2500	0	8	2685	3	9
2505	0	9	2690	3	10
2510	0	10	2695	3	11
2515	0	11	2700	4	0
2520	1	0	2705	4	1
2525	1	1	2710	4	2
2530	1	2	2715	4	3
2535	1	3	2720	4	4
2540	1	4	2725	4	5
2545	1	5	2730	4	6
2550	1	6	2735	4	7
2555	1	7	2740	4	8
2560	1	8	2745	4	9
2565	1	9	2750	4	10
2570	1	10	2755	4	11
2575	1	11	2760	5	0
2580	2	0	2765	5	1
2585	2	1	2770	5	2
2590	2	2	2775	5	3
2595	2	3	2780	5	4
2600	2	4	2785	5	5
2605	2	5	2790	5	6
2610	2	6	2795	5	7
2615	2	7	2800	5	8
2620	2	8	2805	5	9
2625	2	9	2810	5	10
2630	2	10	2815	5	11
2635	2	11	2820	6	0
2640	3	0			

P

N × T

+ 6 st (pcs)

5 st (pcs) × 12
= 60 st (pcs)

2790	5	6
2795	5	7

H 2790 mm

Ø 130 cm

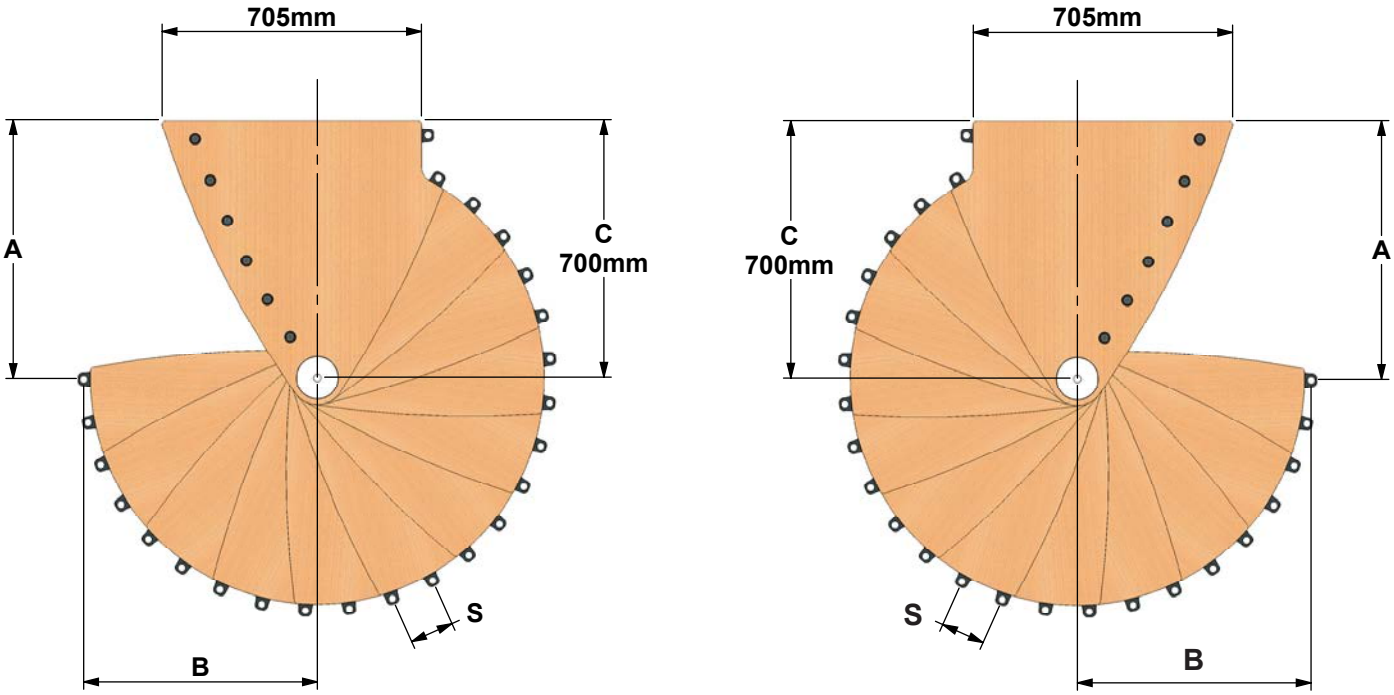

Ø 130 cm		
S	A	B
mm	mm	mm
120	704	635
130	487	402
140	295	510

Ø 150 cm

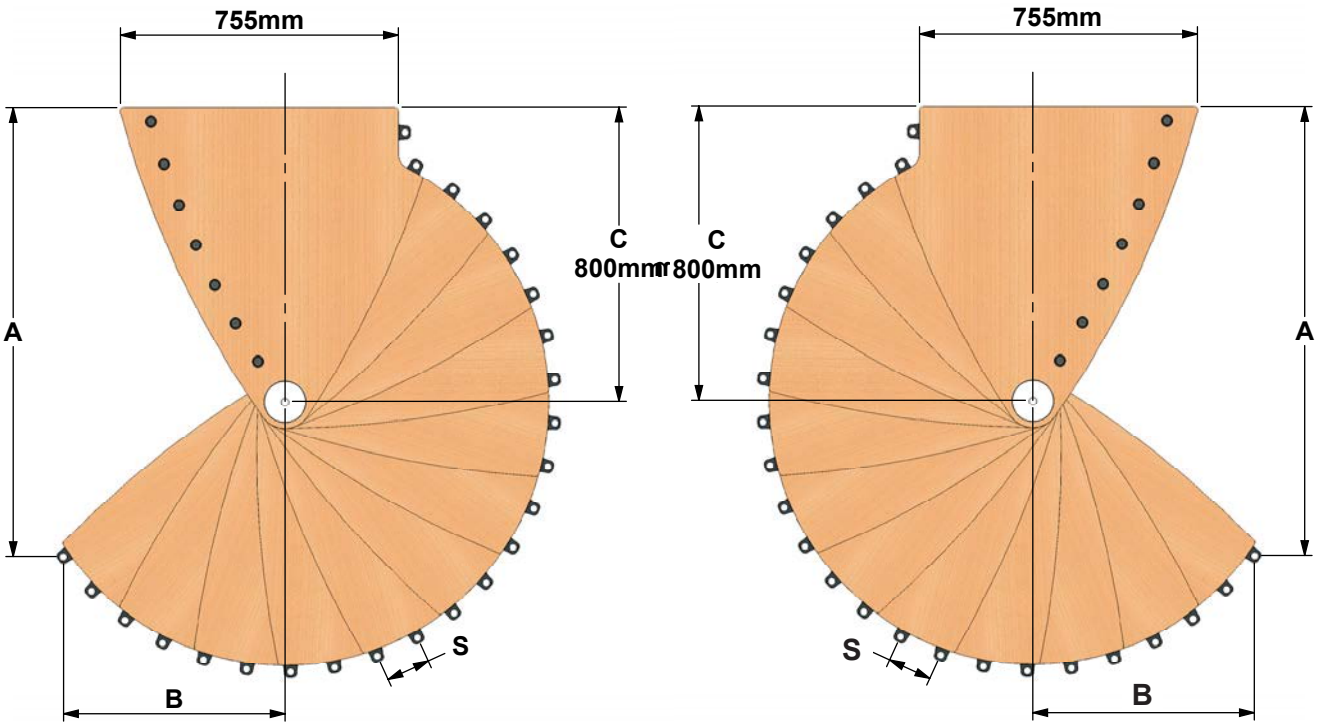

Ø 150 cm		
S	A	B
mm	mm	mm
120	1222	602
130	1025	700
140	808	735

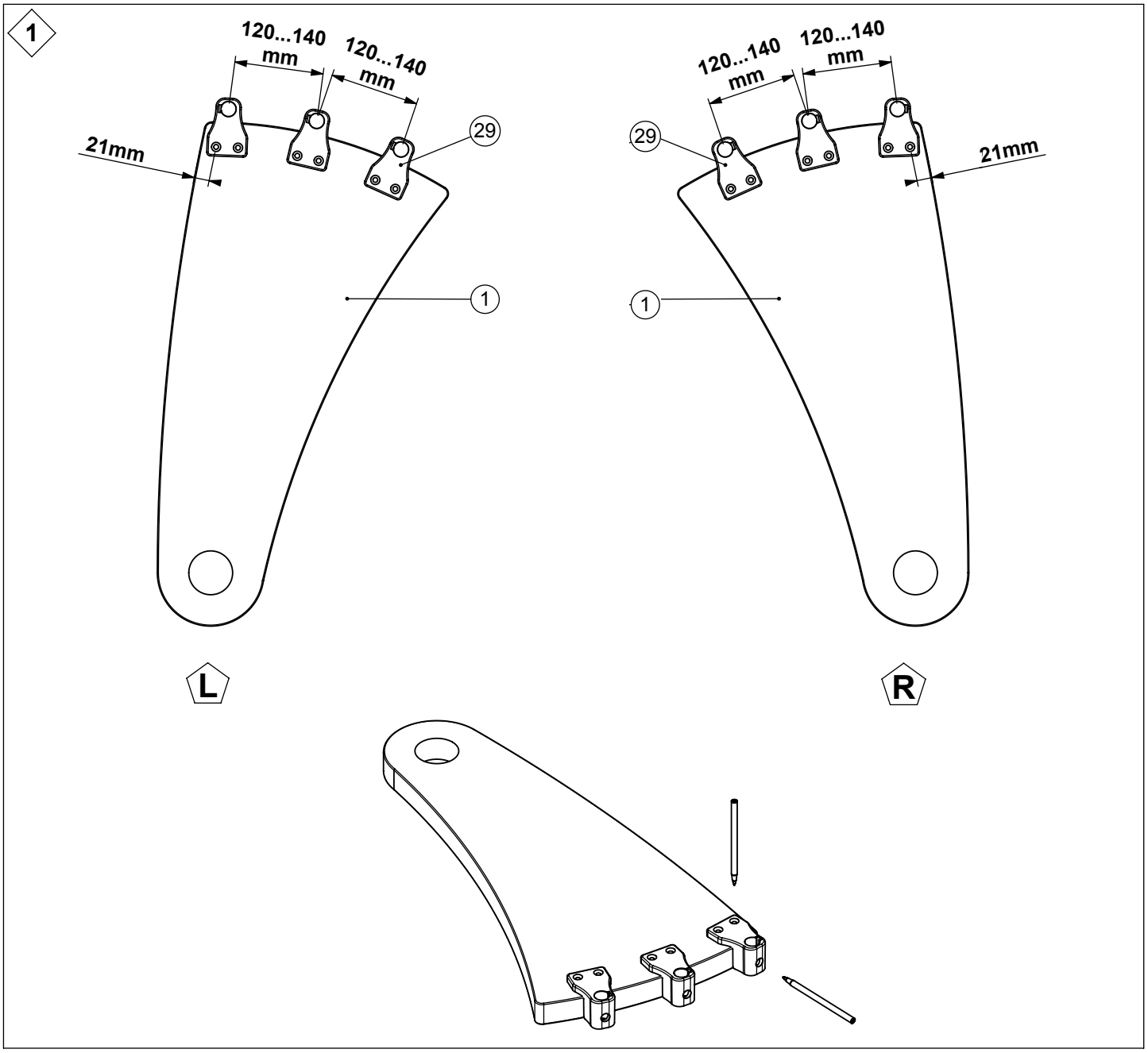
1
120...140 mm
120...140 mm
21mm
29
1
L
120...140 mm
120...140 mm
29
21mm
1
R

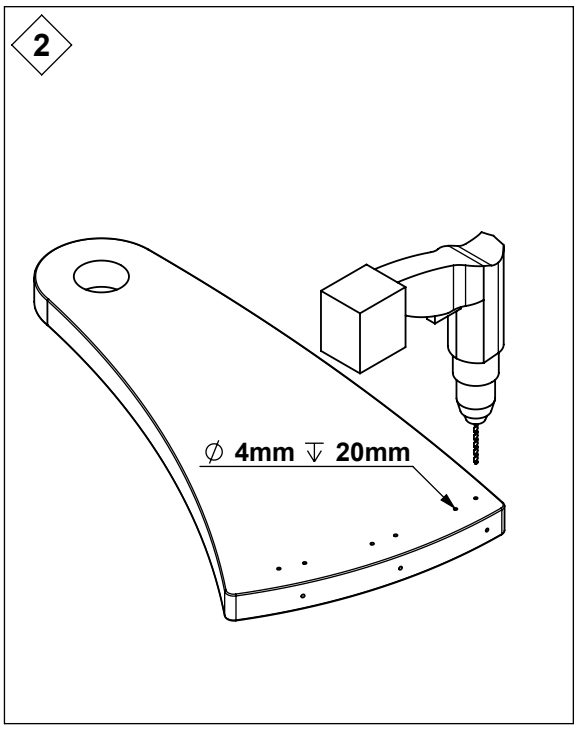
2
∅ 4mm ↧ 20mm

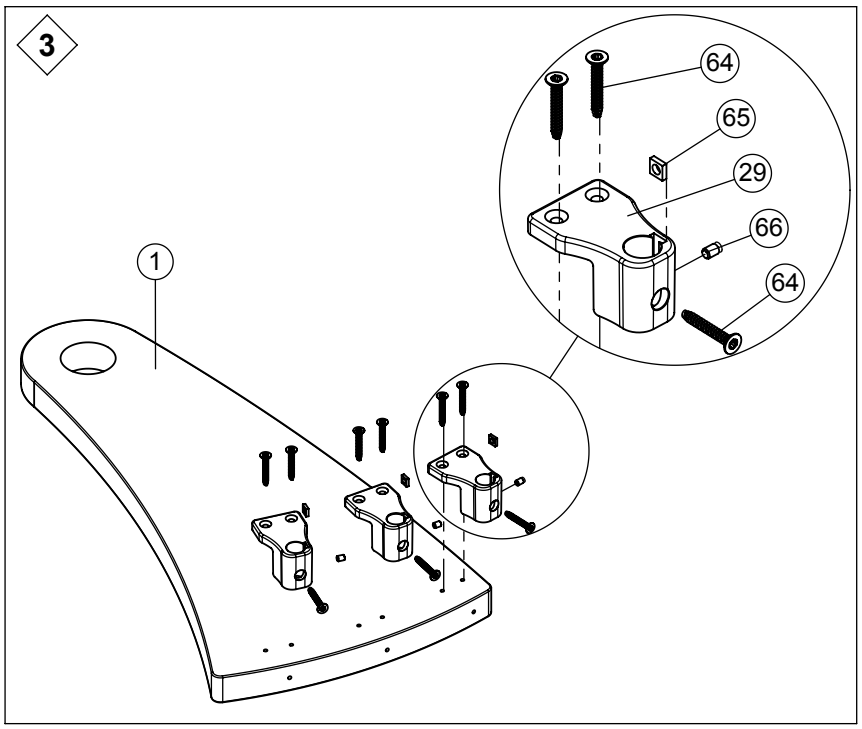
3
64
65
29
66
64
1

4a

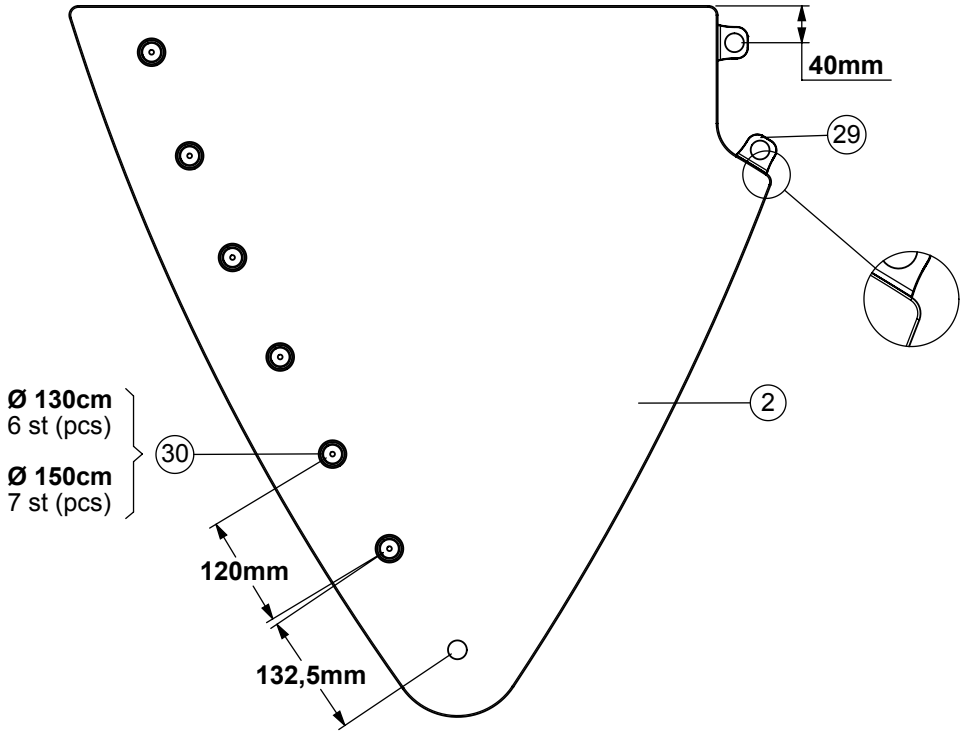
40mm
29
2
Ø 130cm
6 st (pcs)
30
Ø 150cm
7 st (pcs)
120mm
132,5mm

L

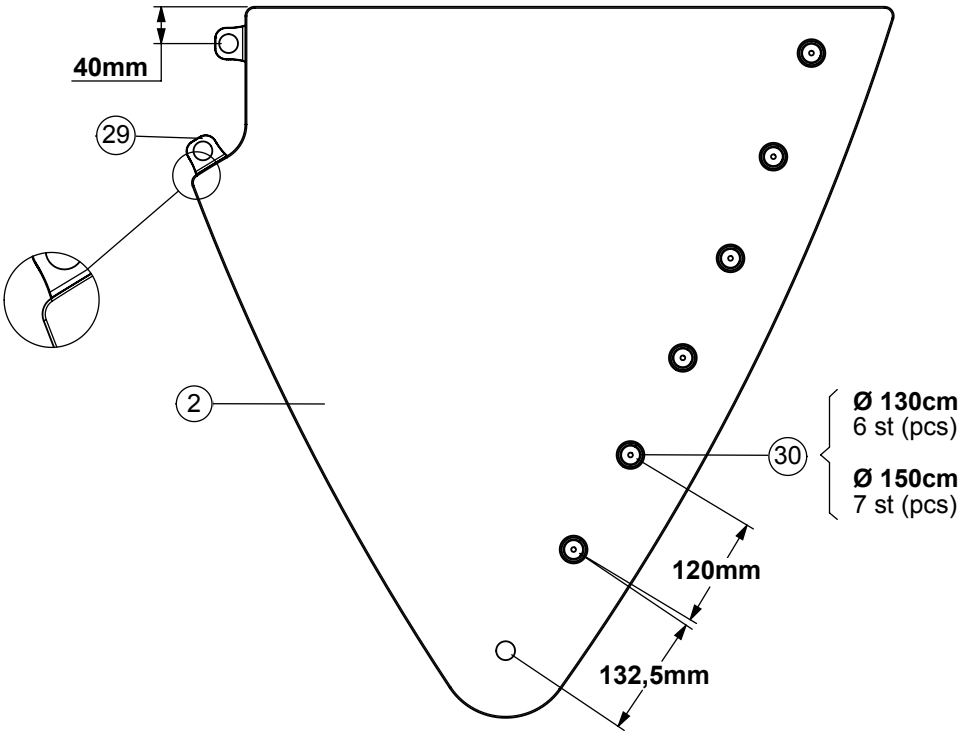
40mm
29
2
Ø 130cm
6 st (pcs)
30
Ø 150cm
7 st (pcs)
120mm
132,5mm

R

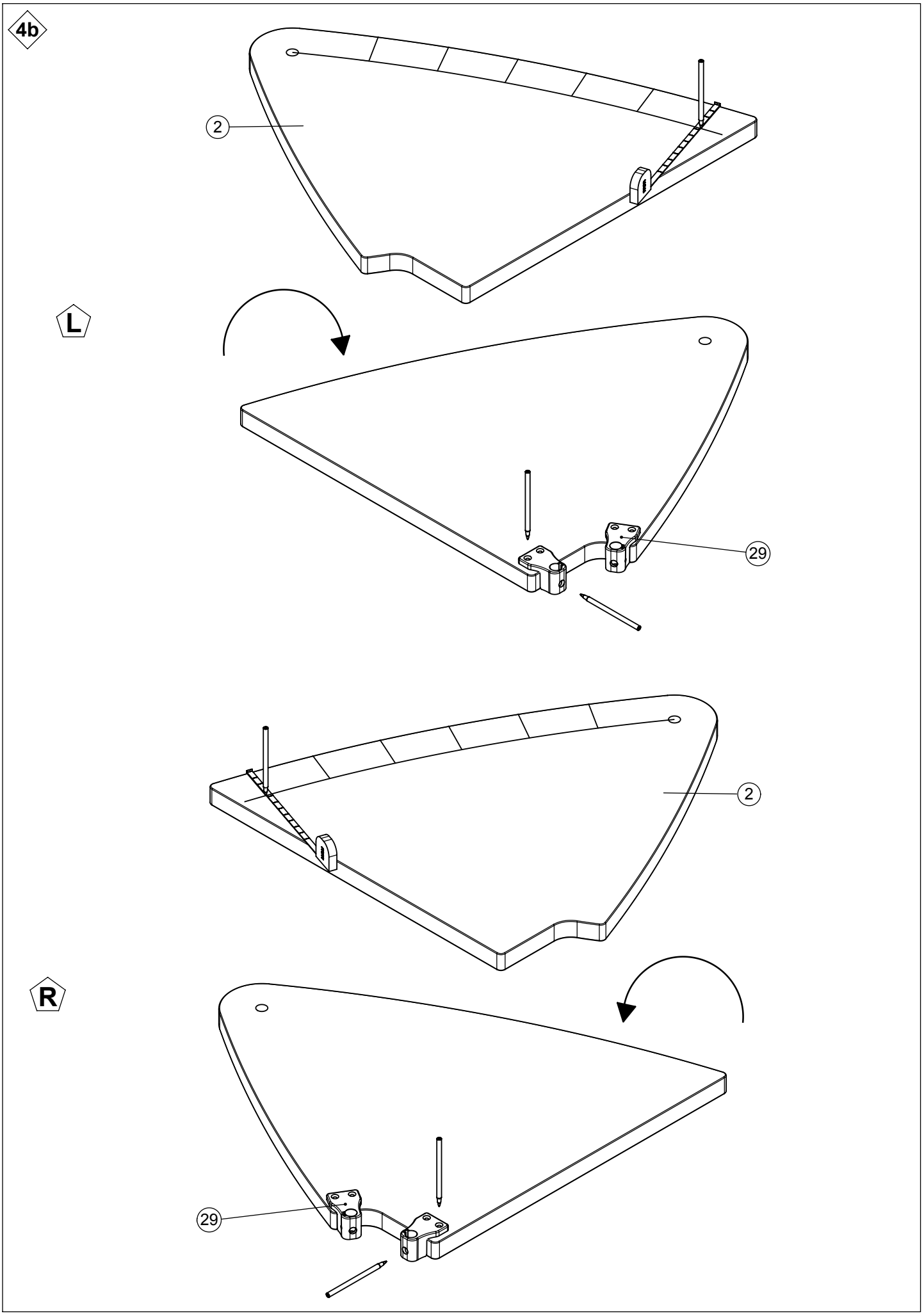
4b
2
L
29
2
R
29

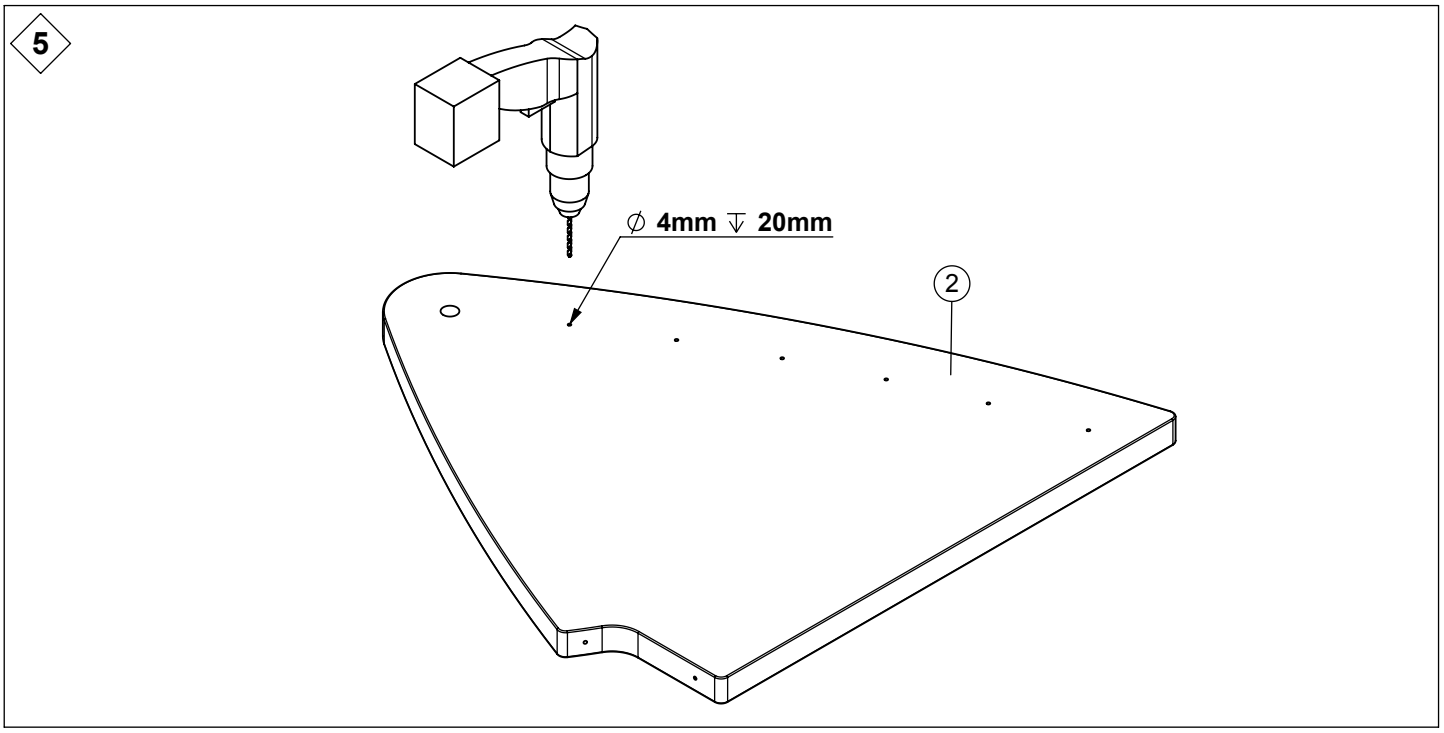
5
∅ 4mm ↧ 20mm
2

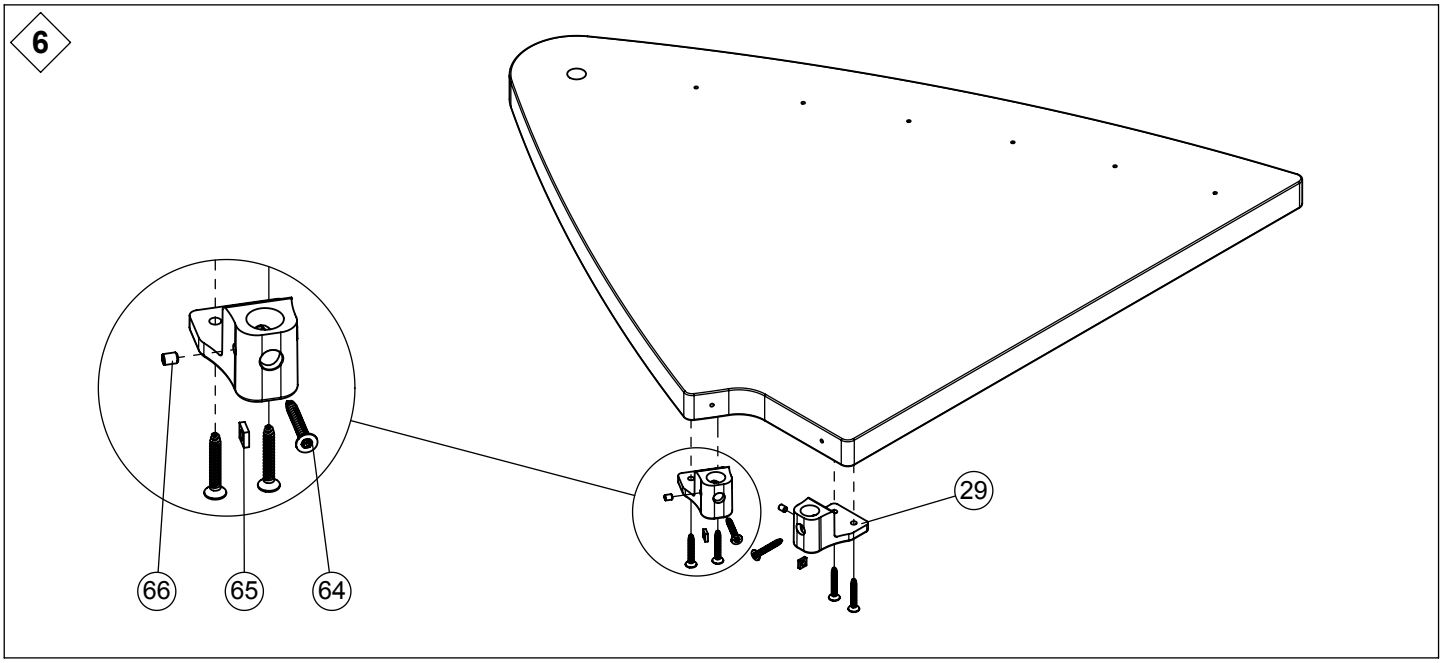
6
29
66
65
64

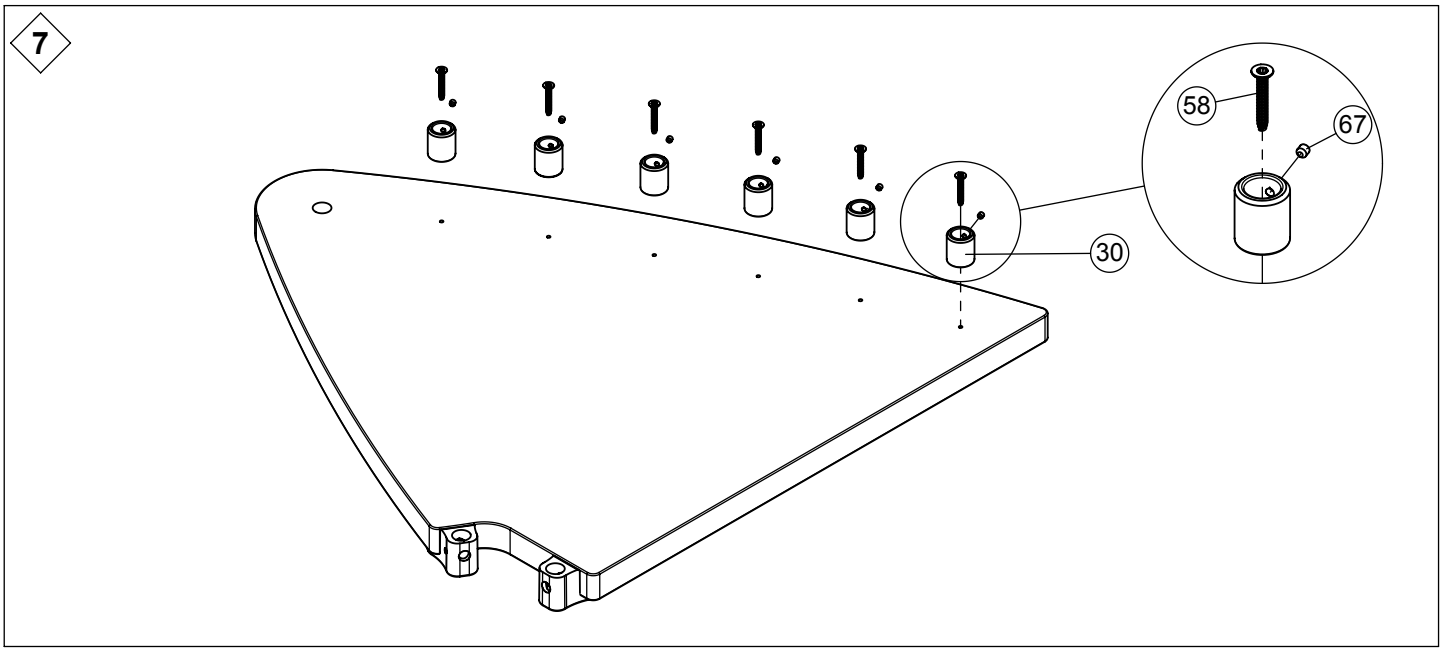
7
58
67
30

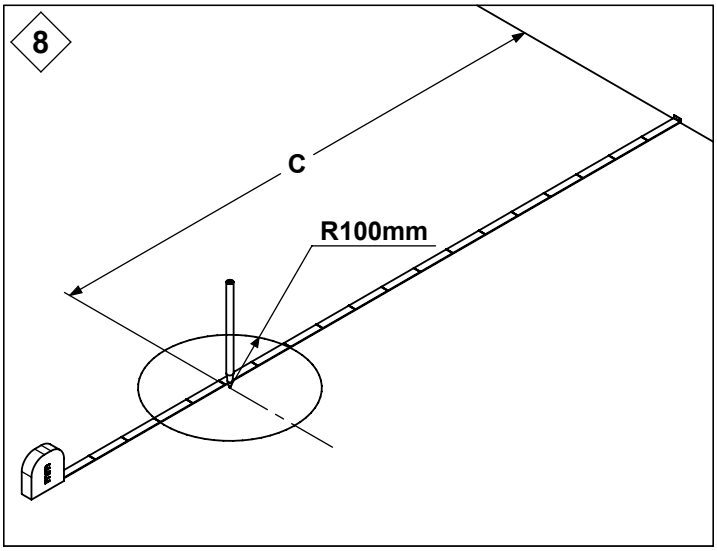
8
C
R100mm

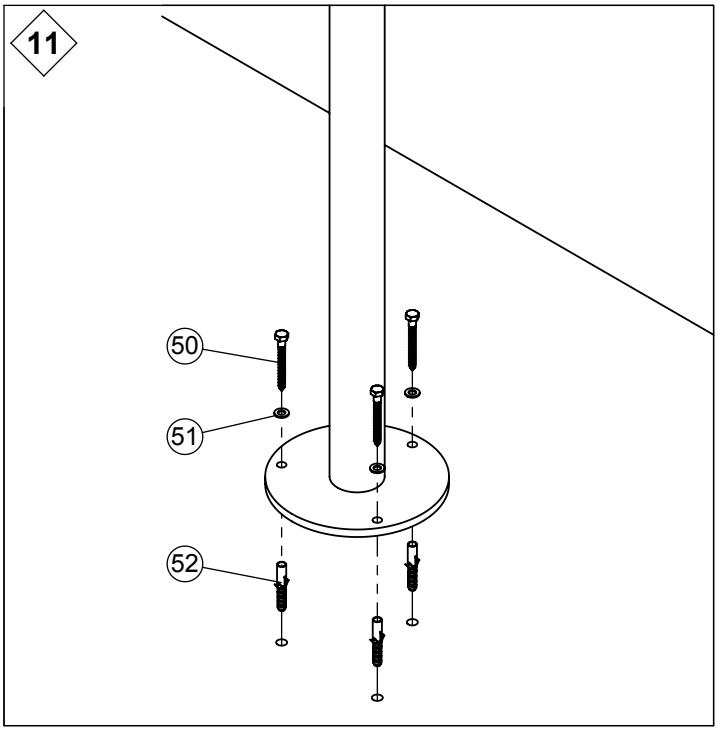
11
50
51
52

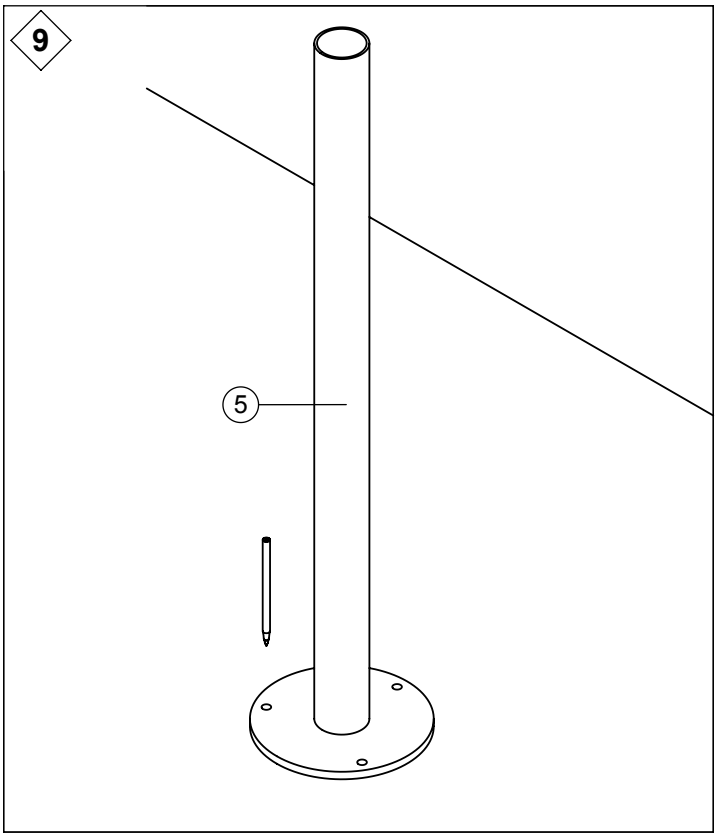
9
5

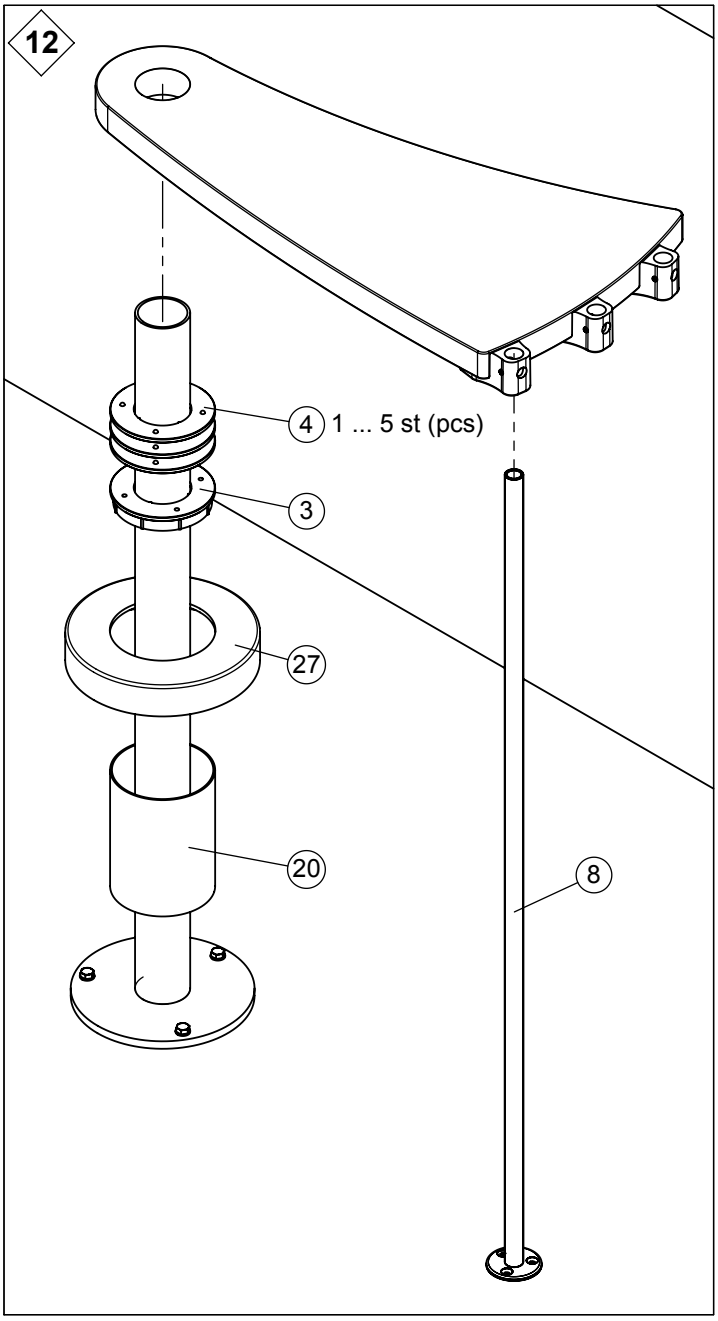
12
4 1 ... 5 st (pcs)
3
27
20
8

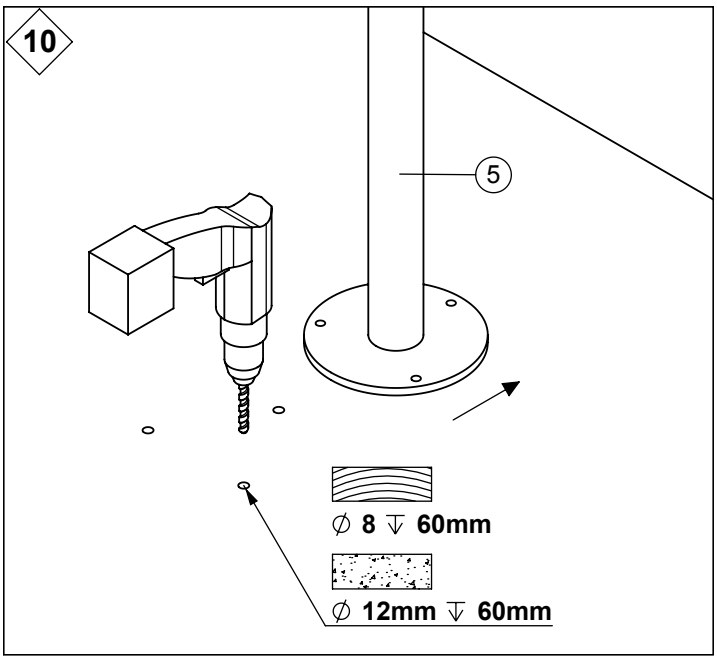
10
5
∅ 8 ↓ 60mm
∅ 12mm ↓ 60mm

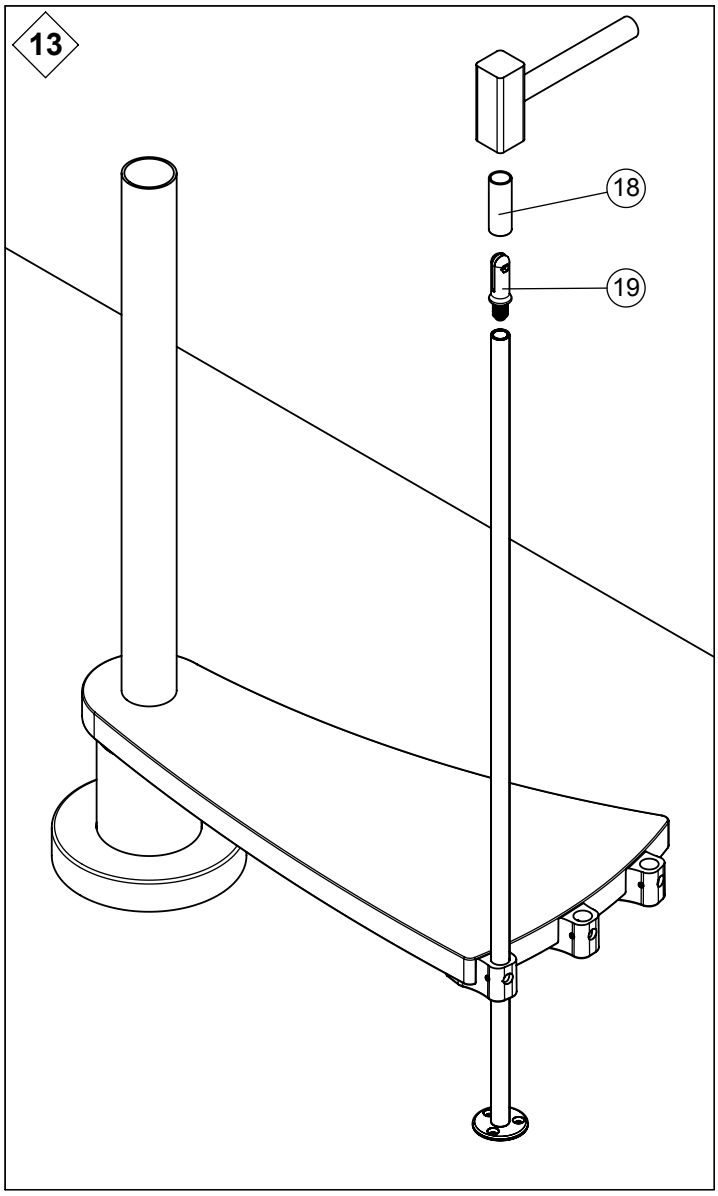
13
18
19

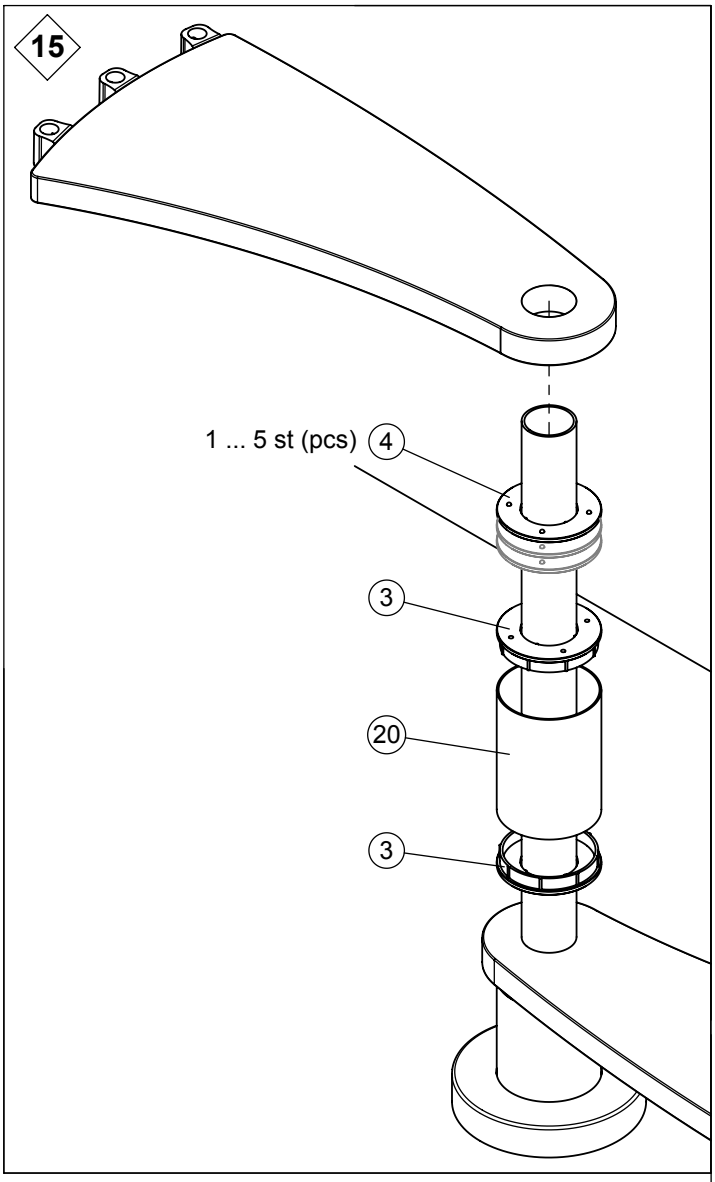
15
1 ... 5 st (pcs)
4
3
20
3

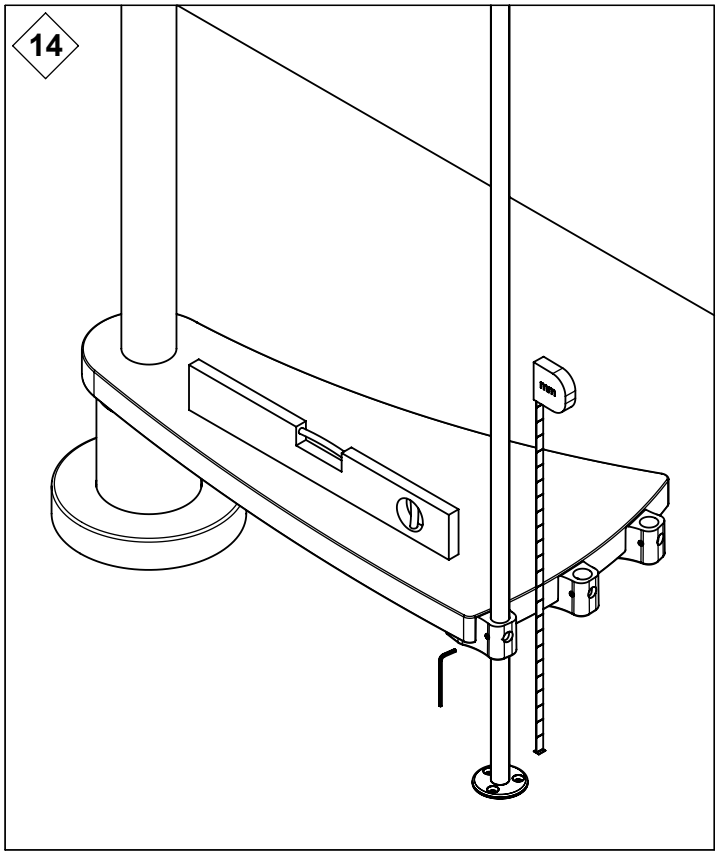
14

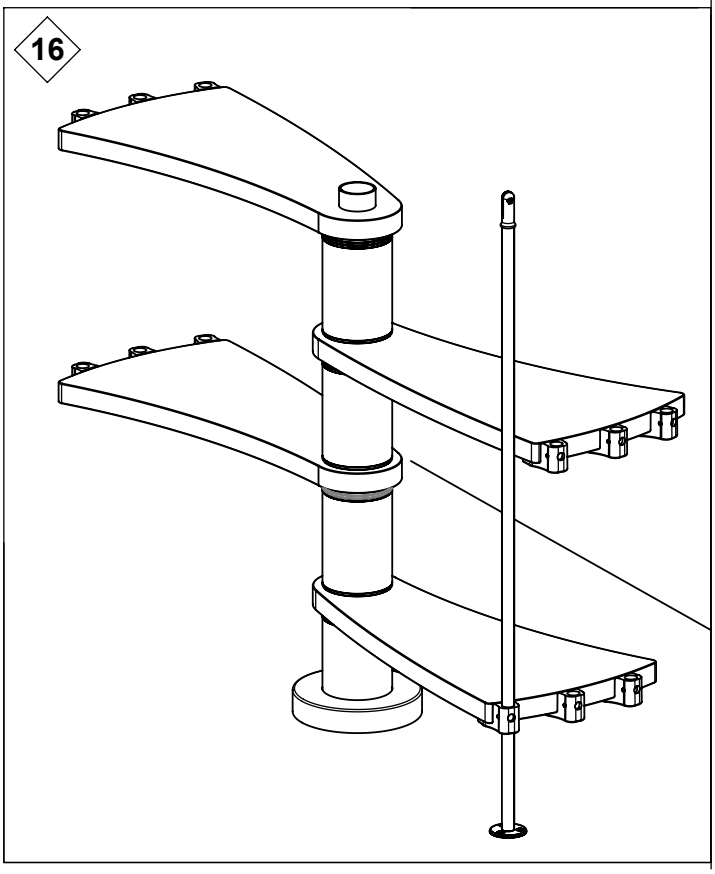
16

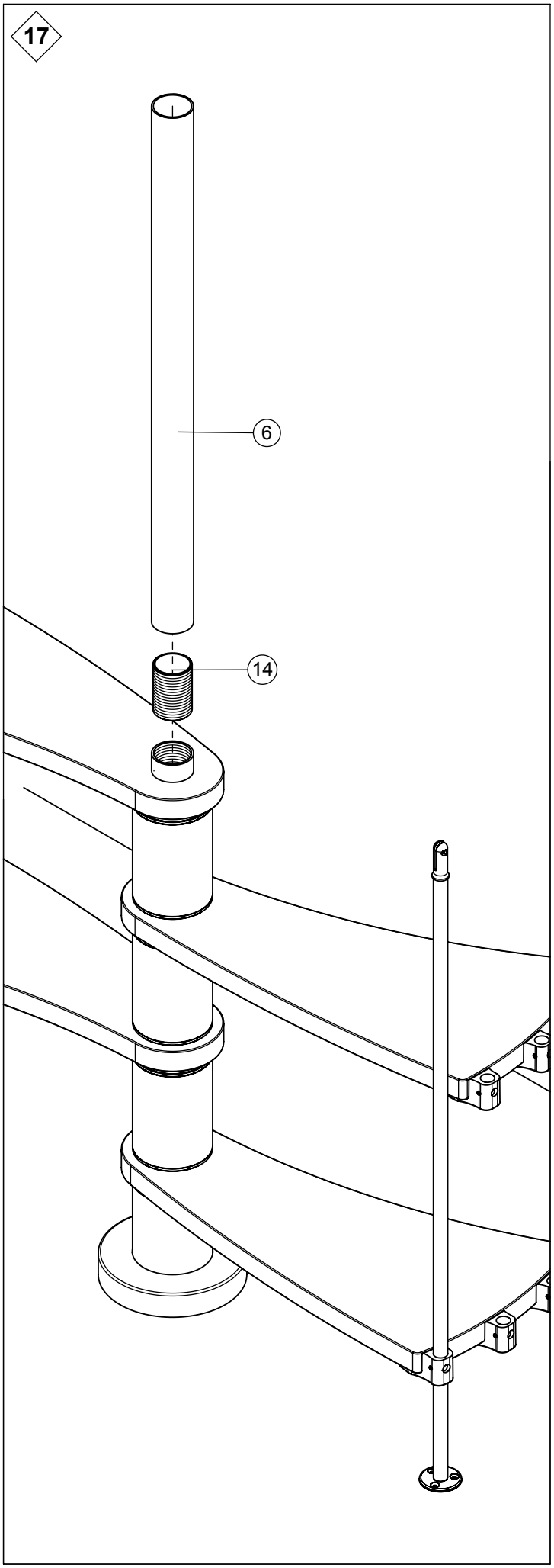
17
6
14

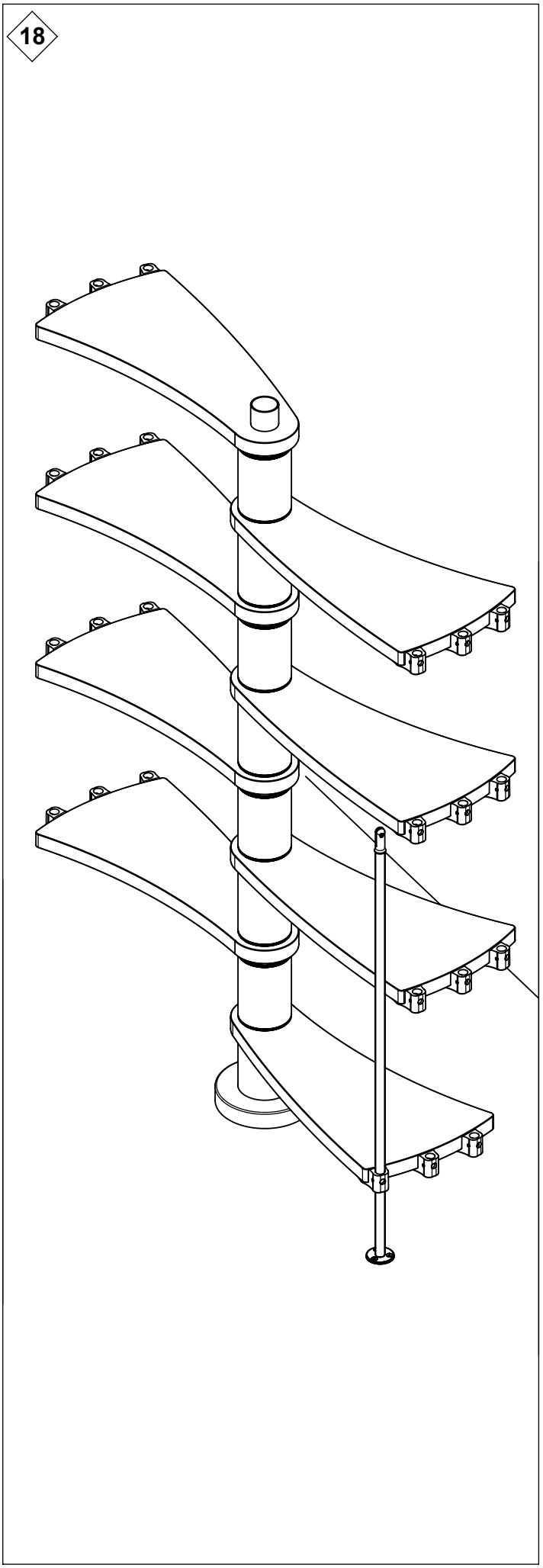
18

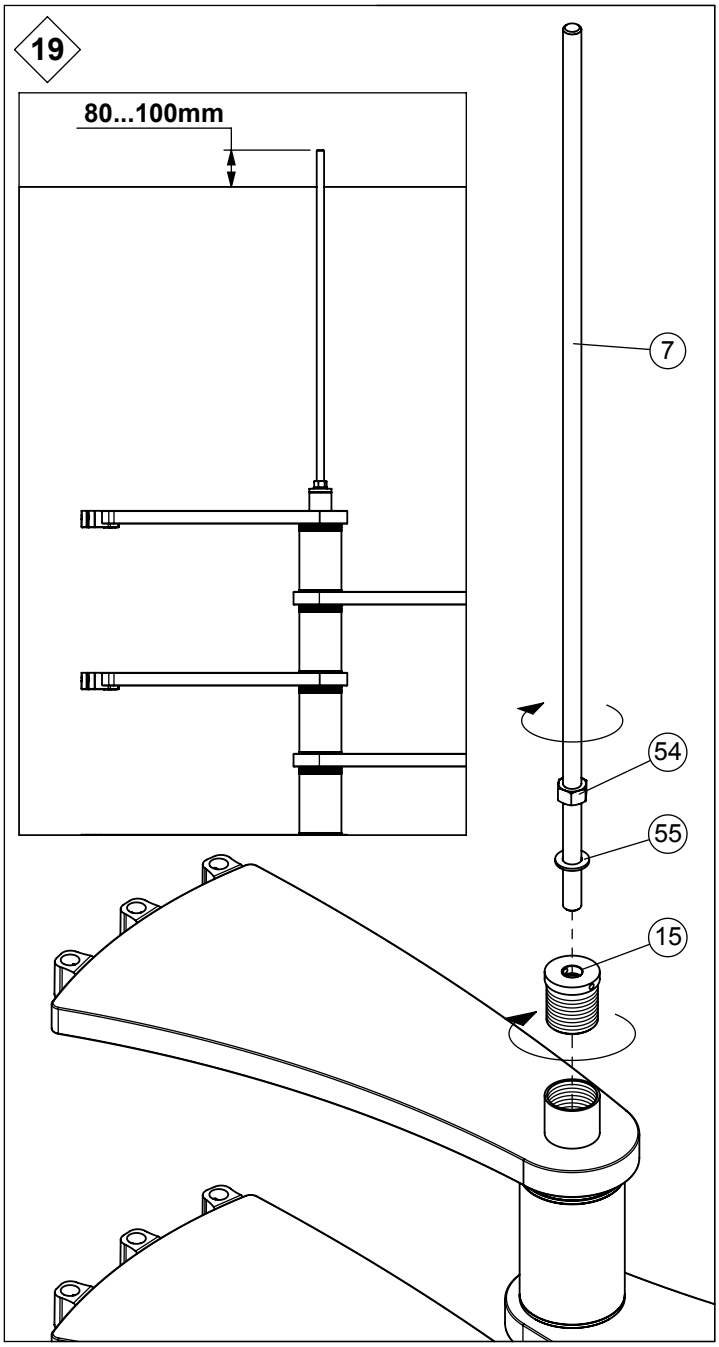
19
80...100mm
7
54
55
15

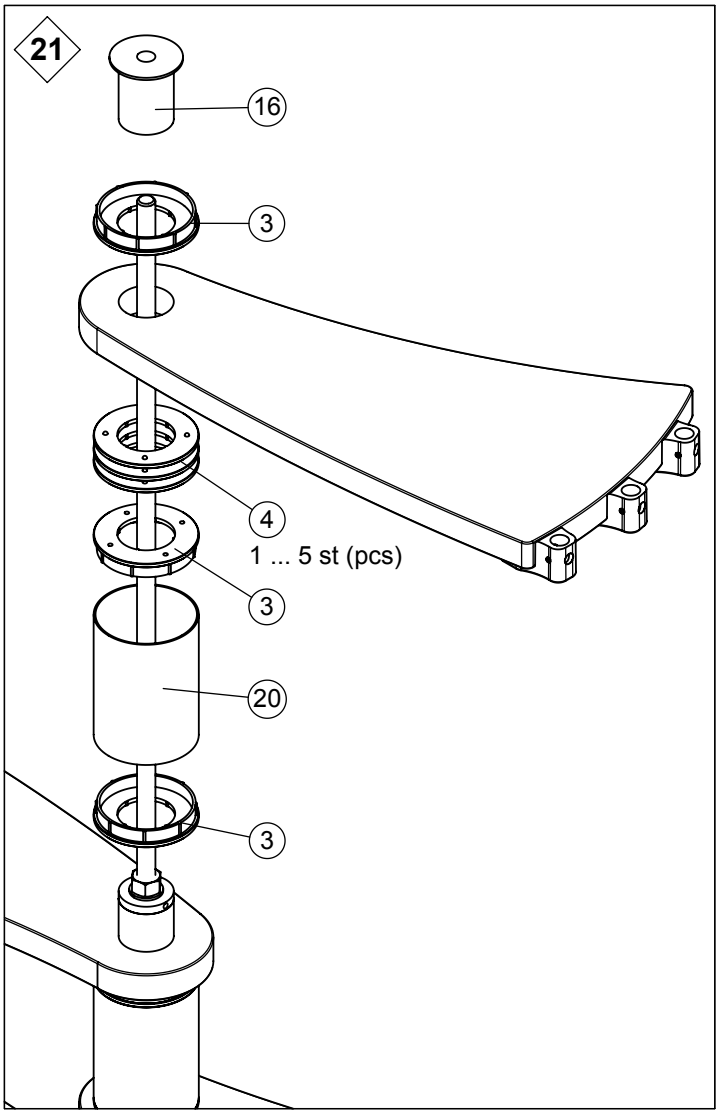
21
16
3
4
1 ... 5 st (pcs)
3
20
3

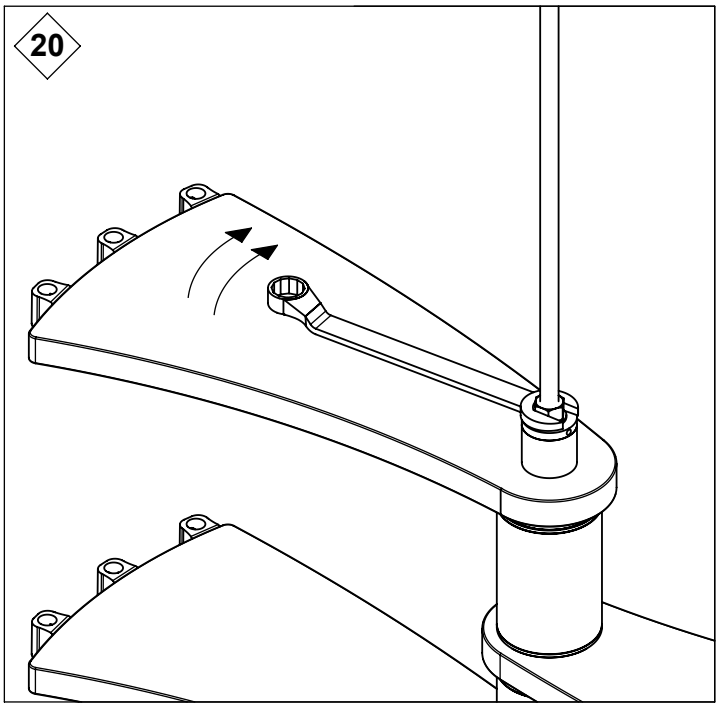
20

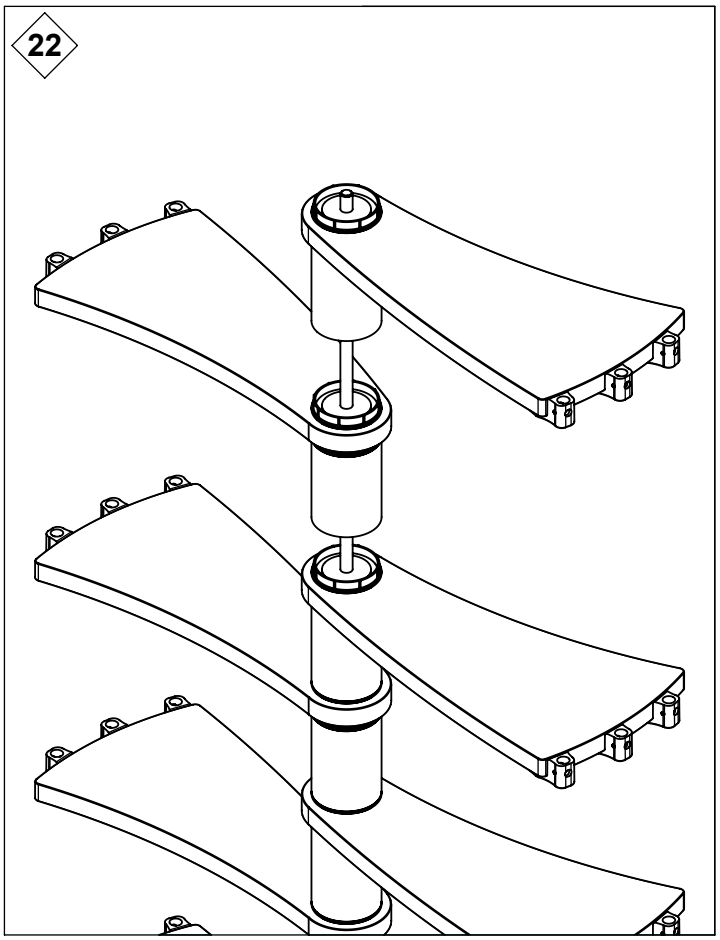
22

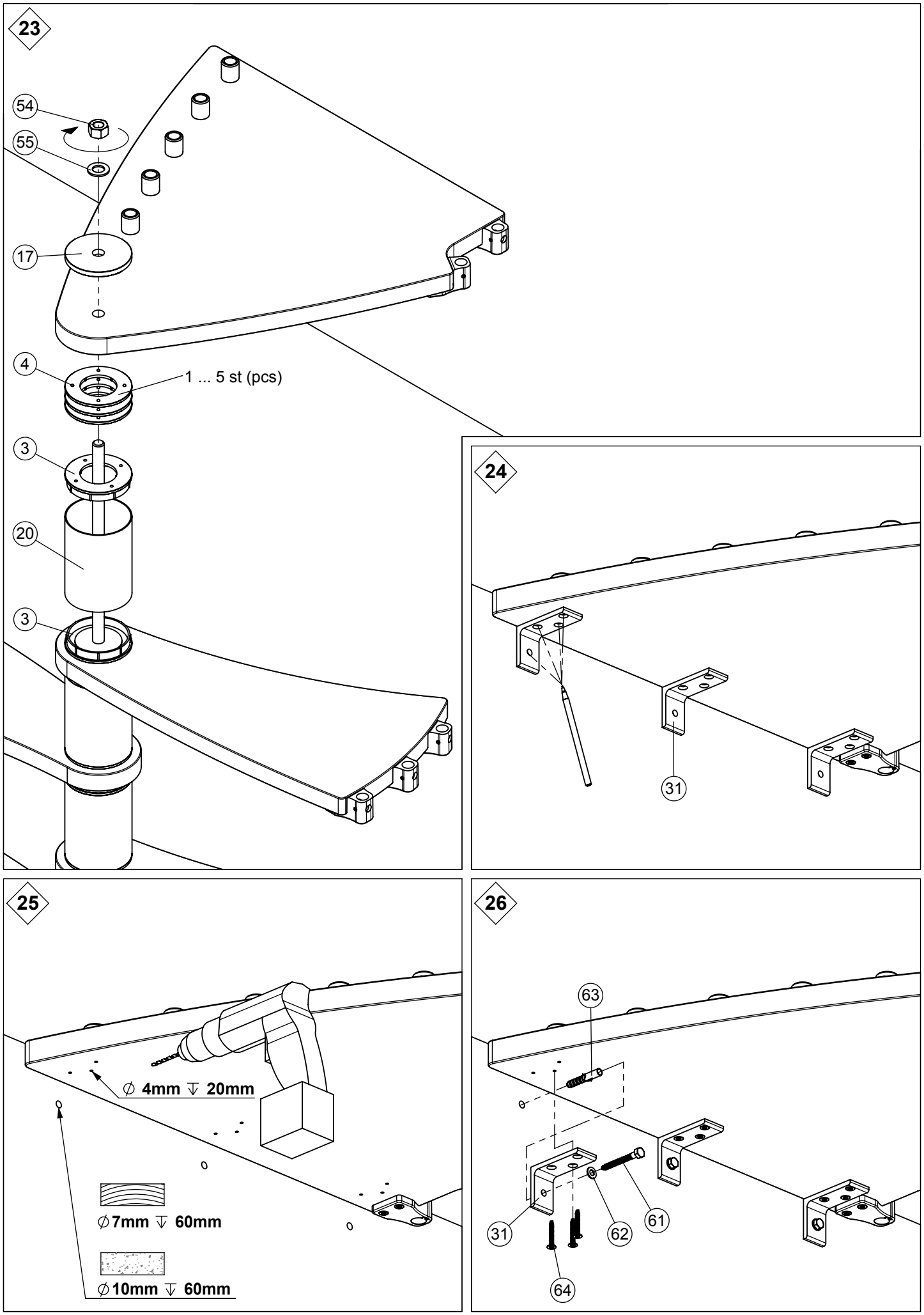
23
54
55
17
4
1 ... 5 st (pcs)
3
20
3
24
31
25
∅ 4mm ↓ 20mm
∅7mm ↓ 60mm
∅10mm ↓ 60mm
26
63
31
62
61
64

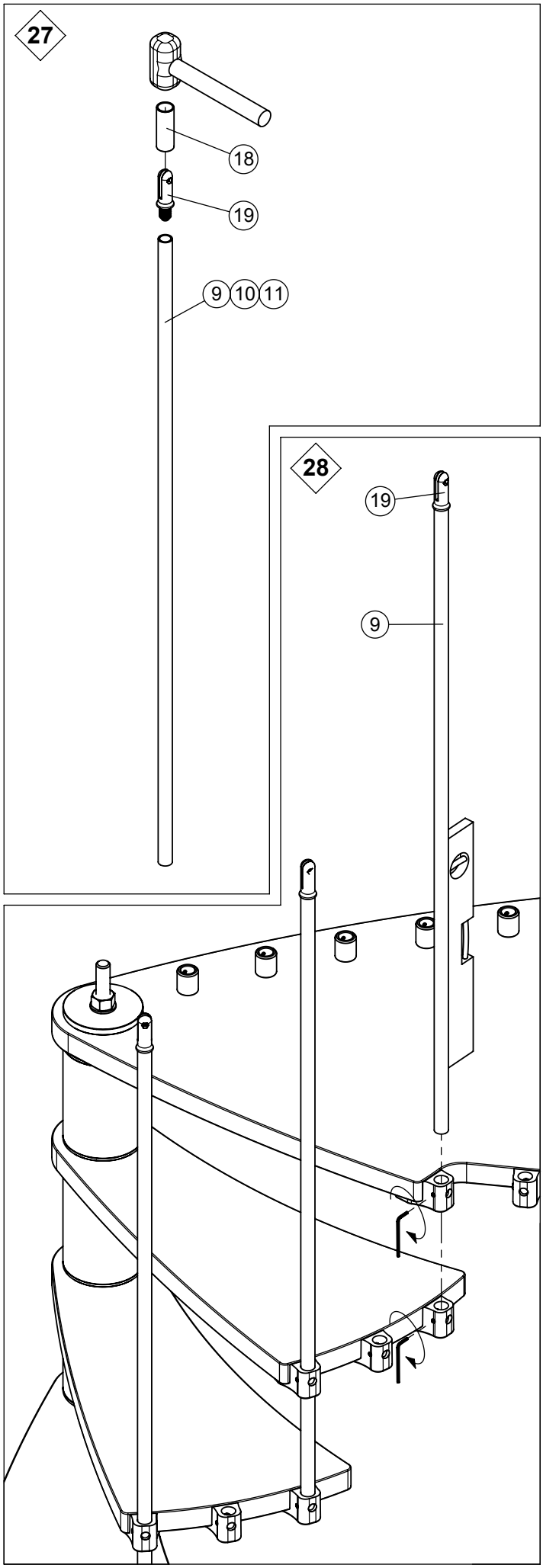
27
18
19
9
10
11
28
19
9

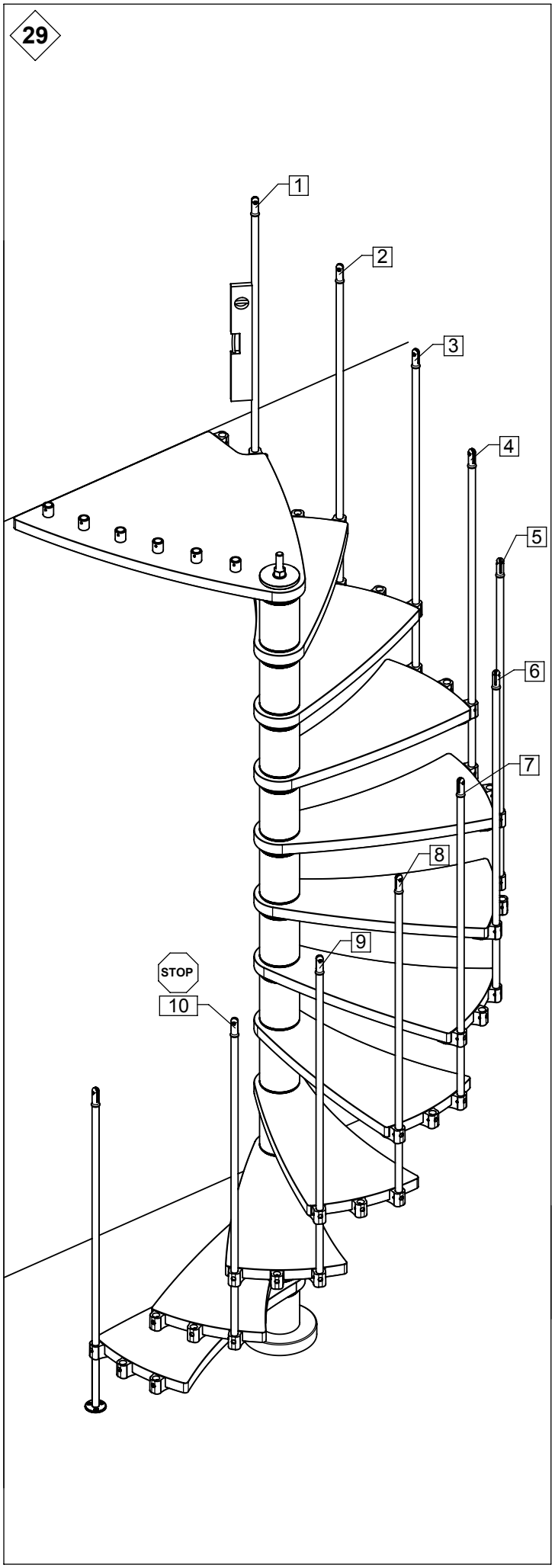
29
1
2
3
4
5
6
7
8
9
STOP
10

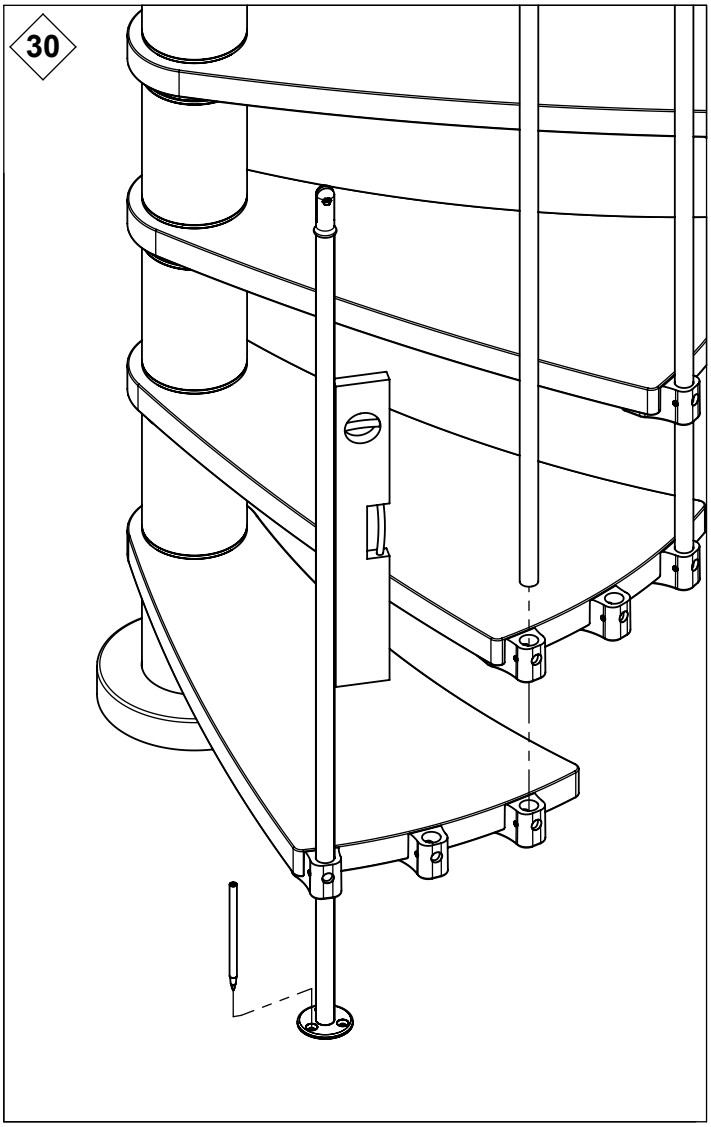
30

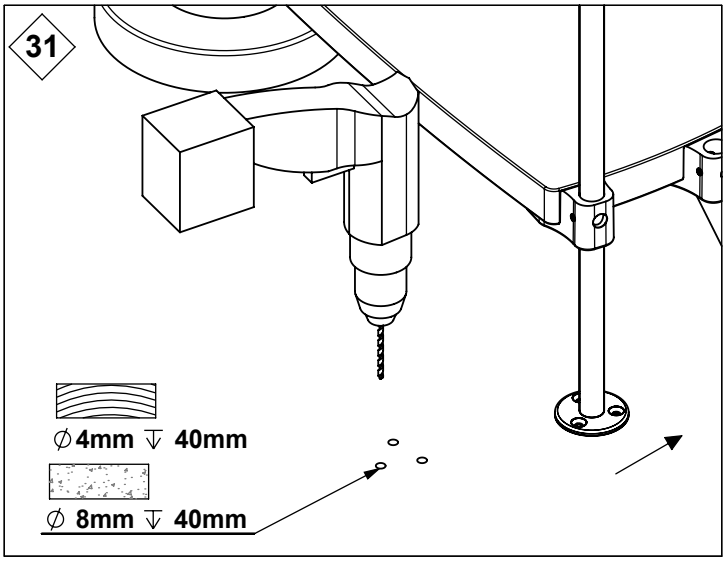
31
∅4mm ↓ 40mm
∅ 8mm ↓ 40mm

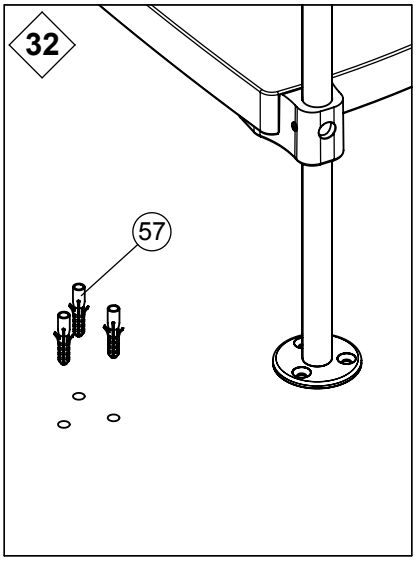
32
57

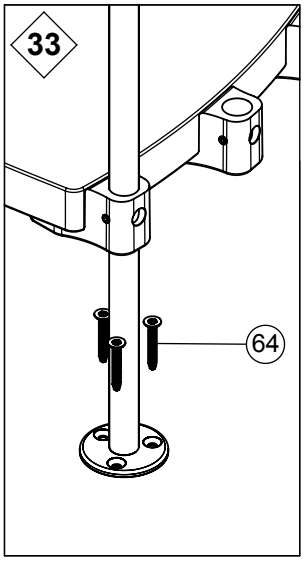
33
64

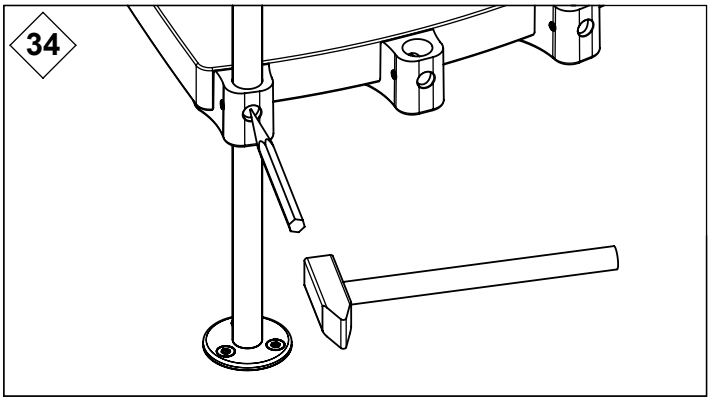
34

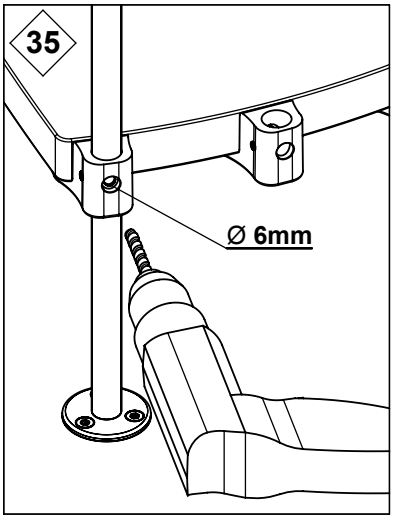
35
Ø 6mm

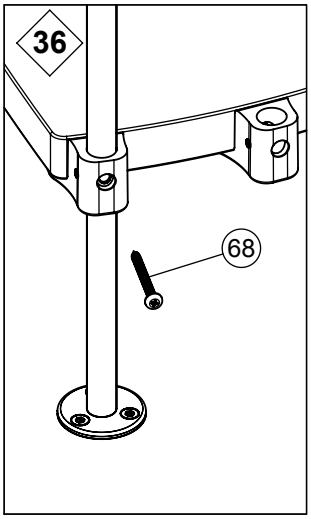
36
68

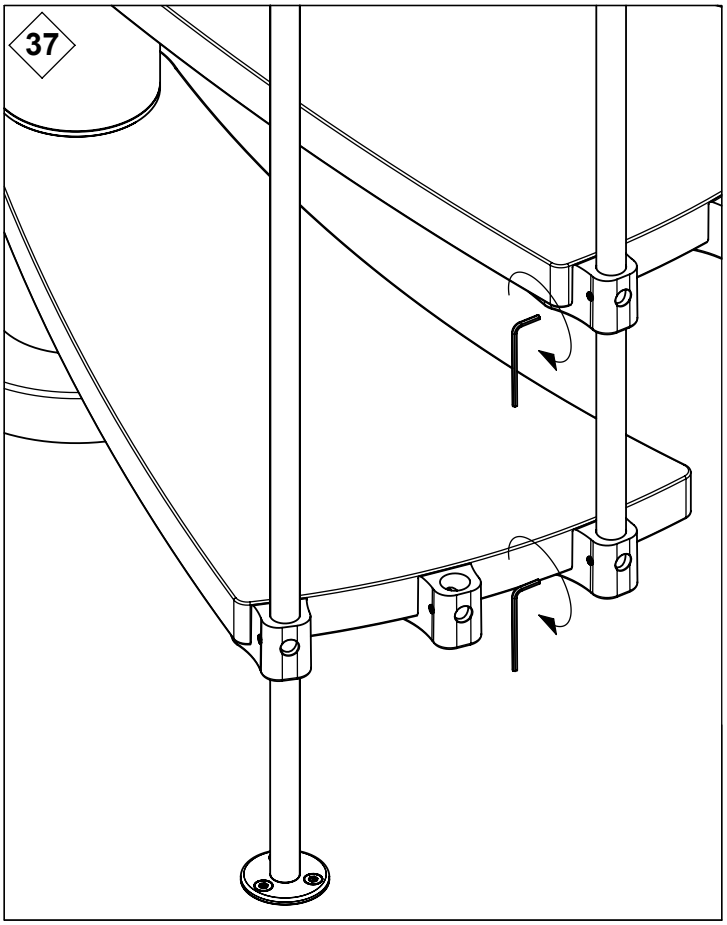
37

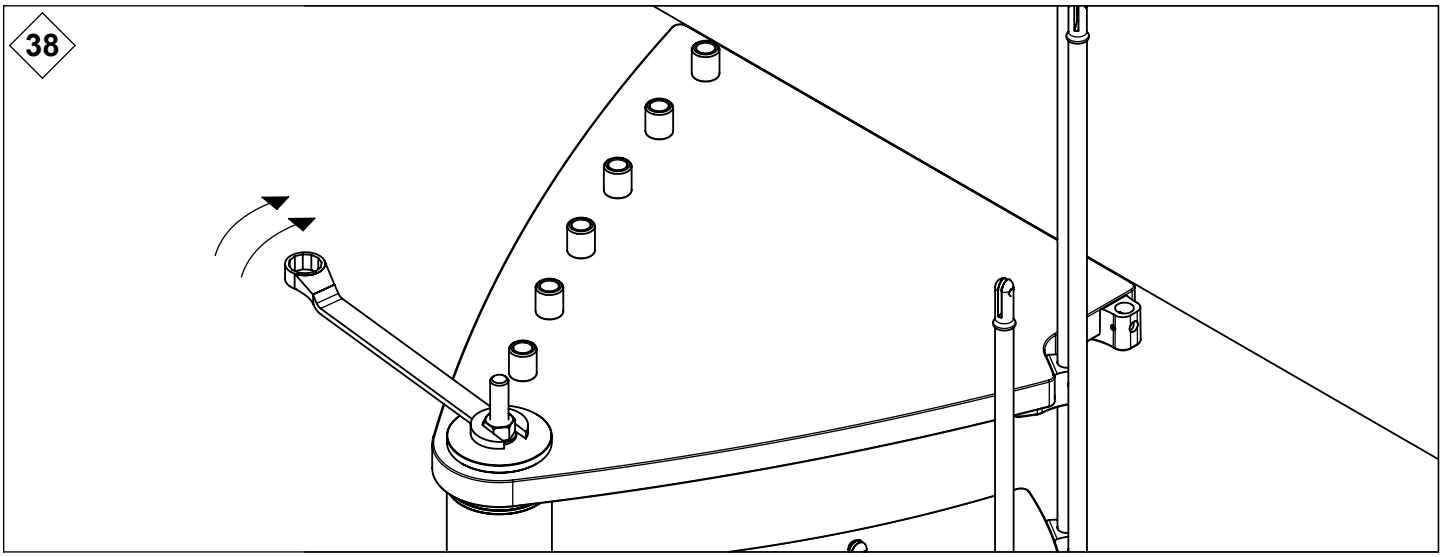
38

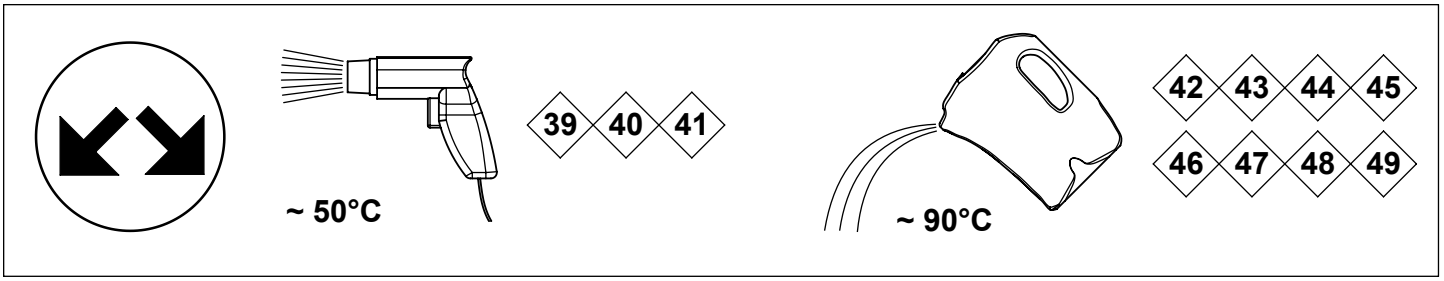
~ 50°C
39
40
41
~ 90°C
42
43
44
45
46
47
48
49

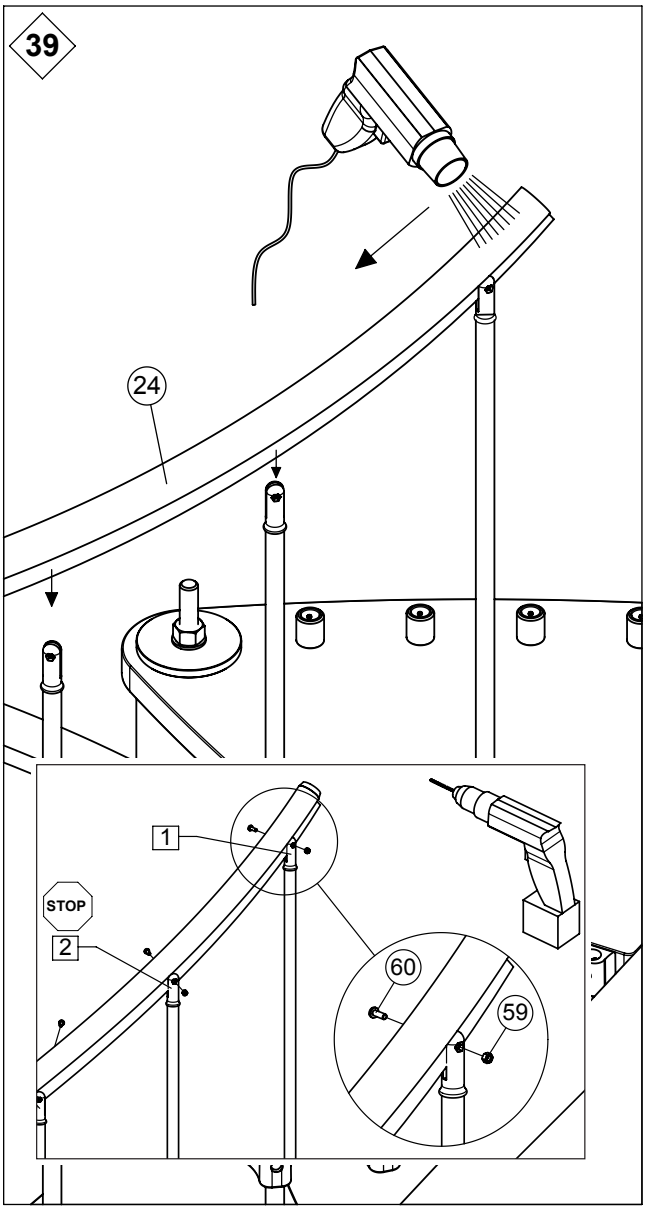
39
24
1
STOP
2
60
59

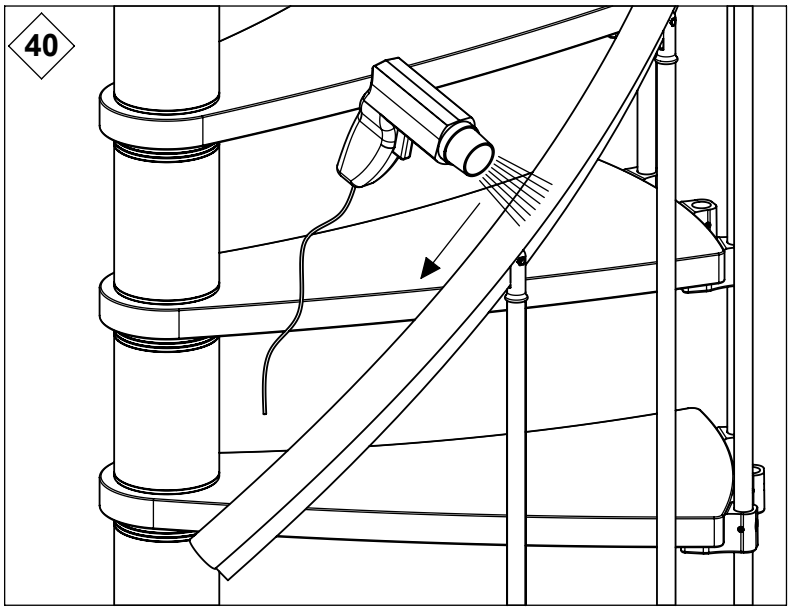
40

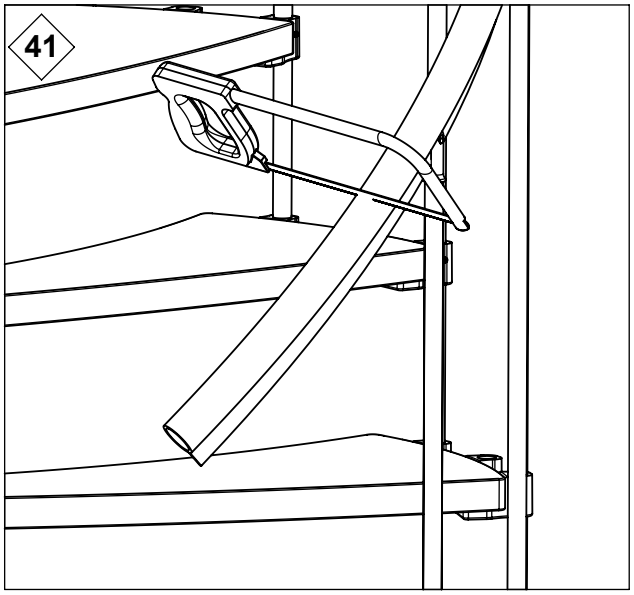
41

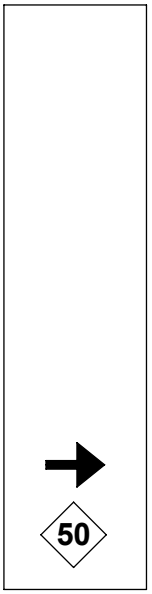
50

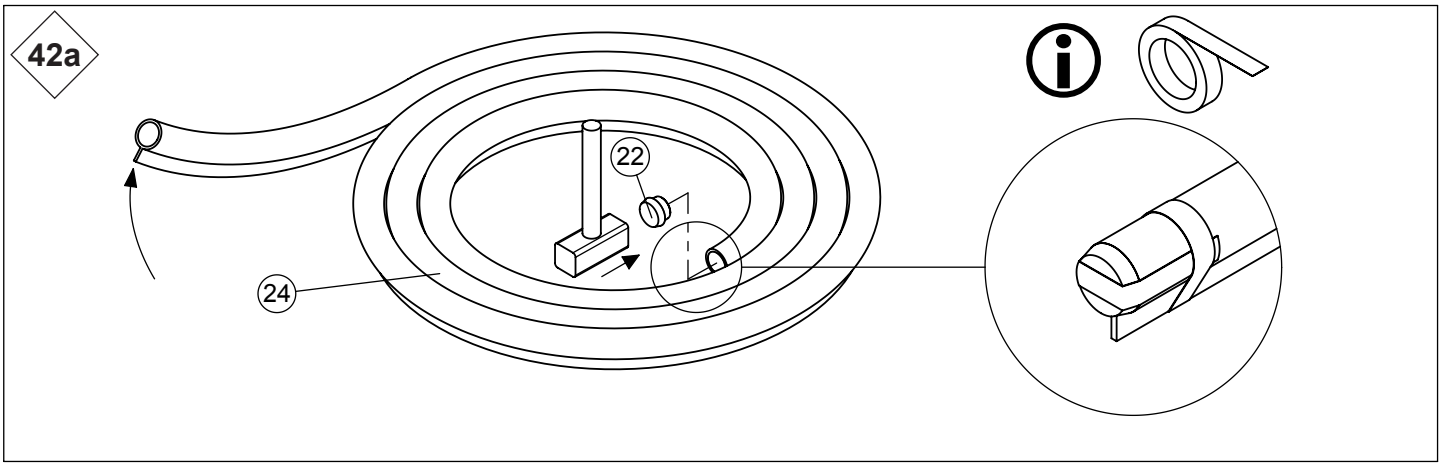
42a
22
24

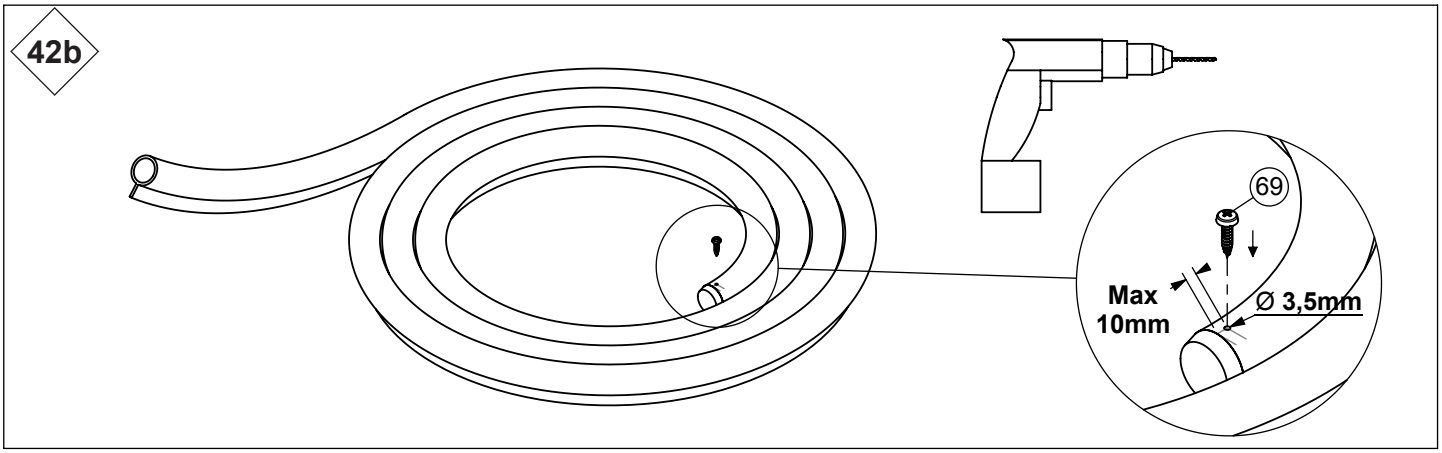
42b
69
Max
10mm
Ø 3,5mm

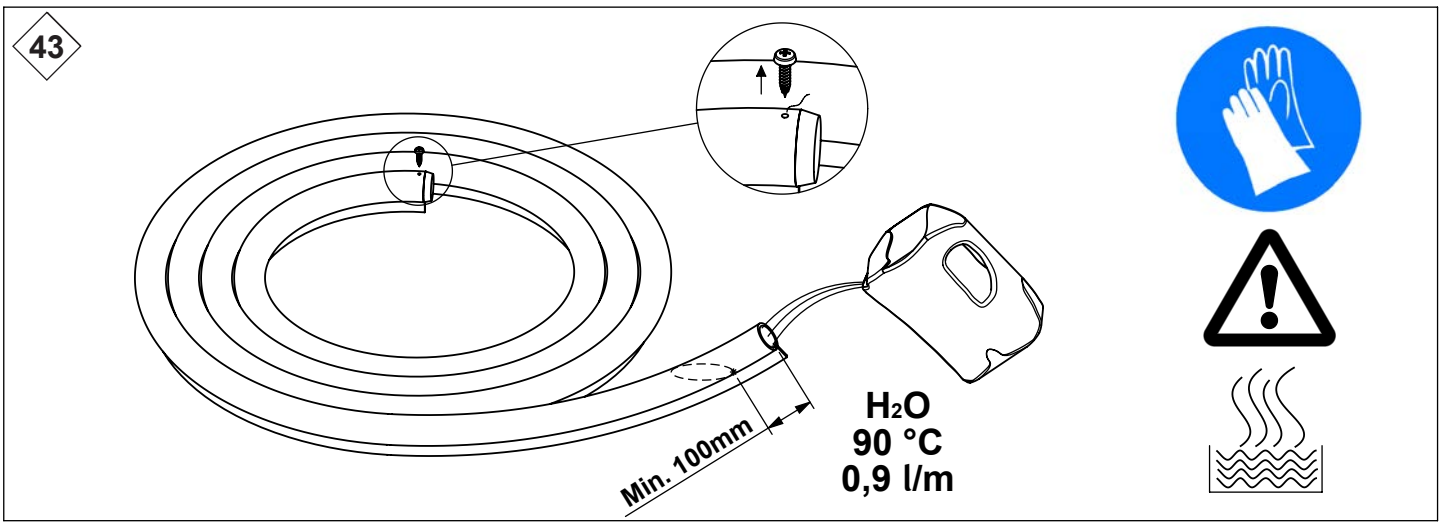
43
Min. 100mm
H2O
90 °C
0,9 l/m

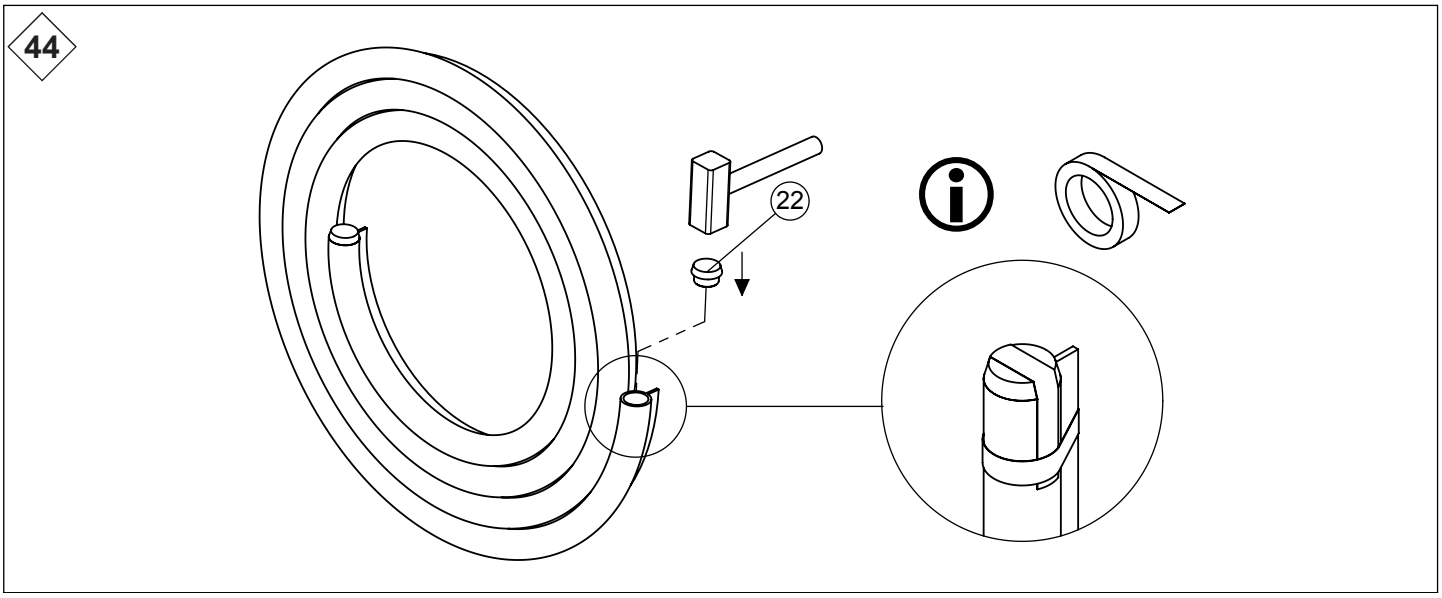
44
22

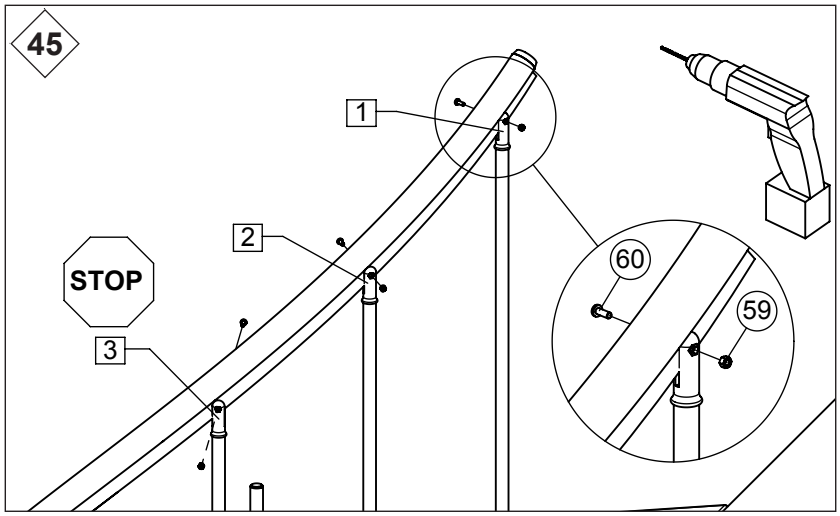
45
1
2
STOP
3
60
59

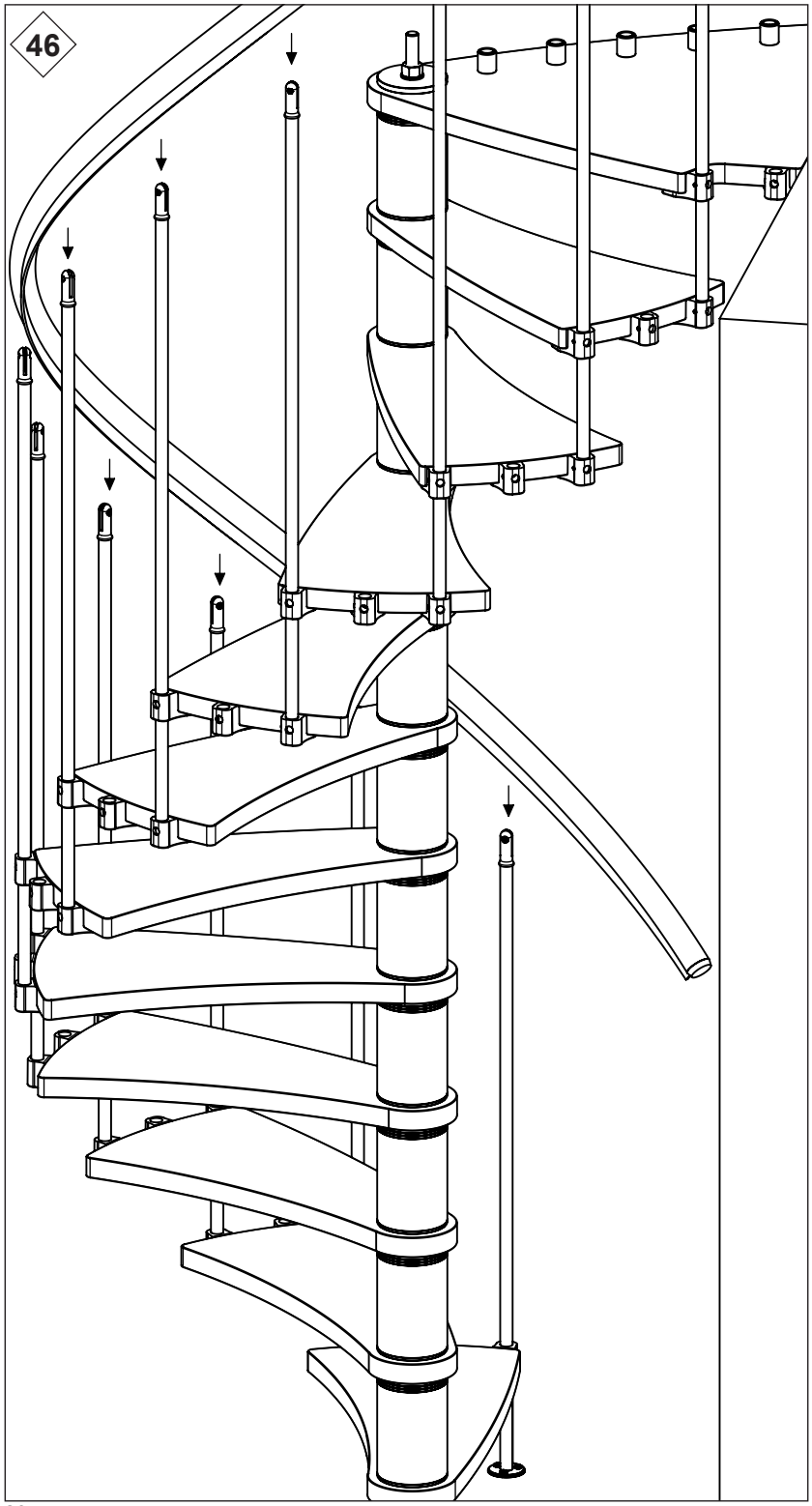
46

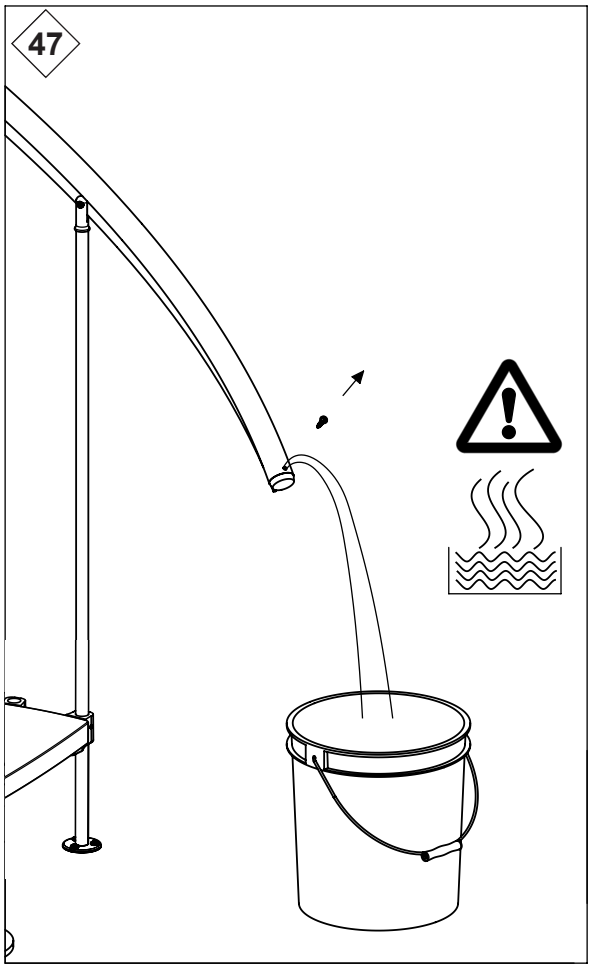
47

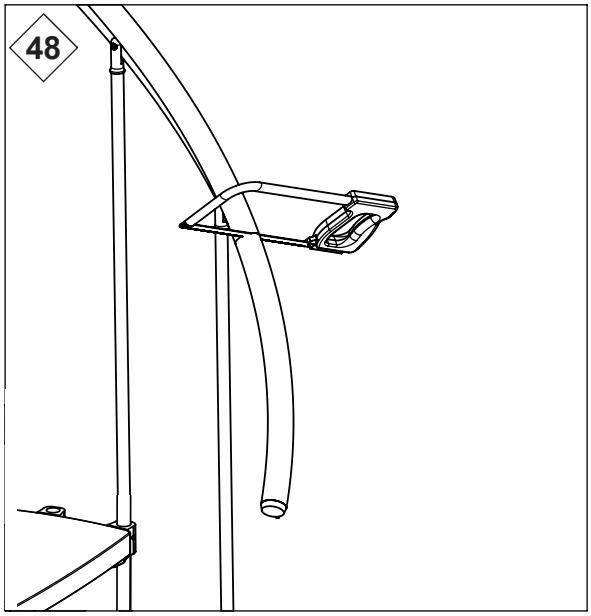
48

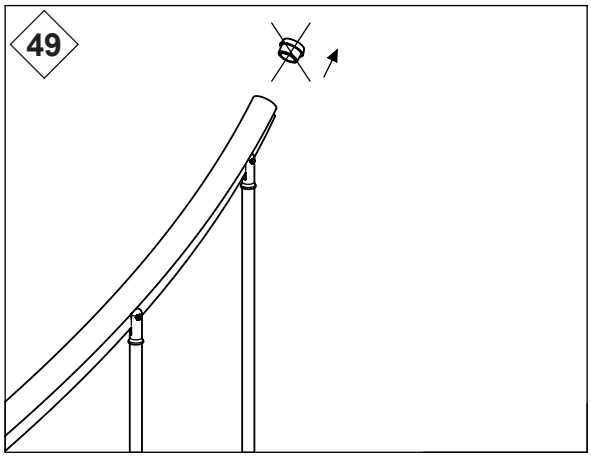
49

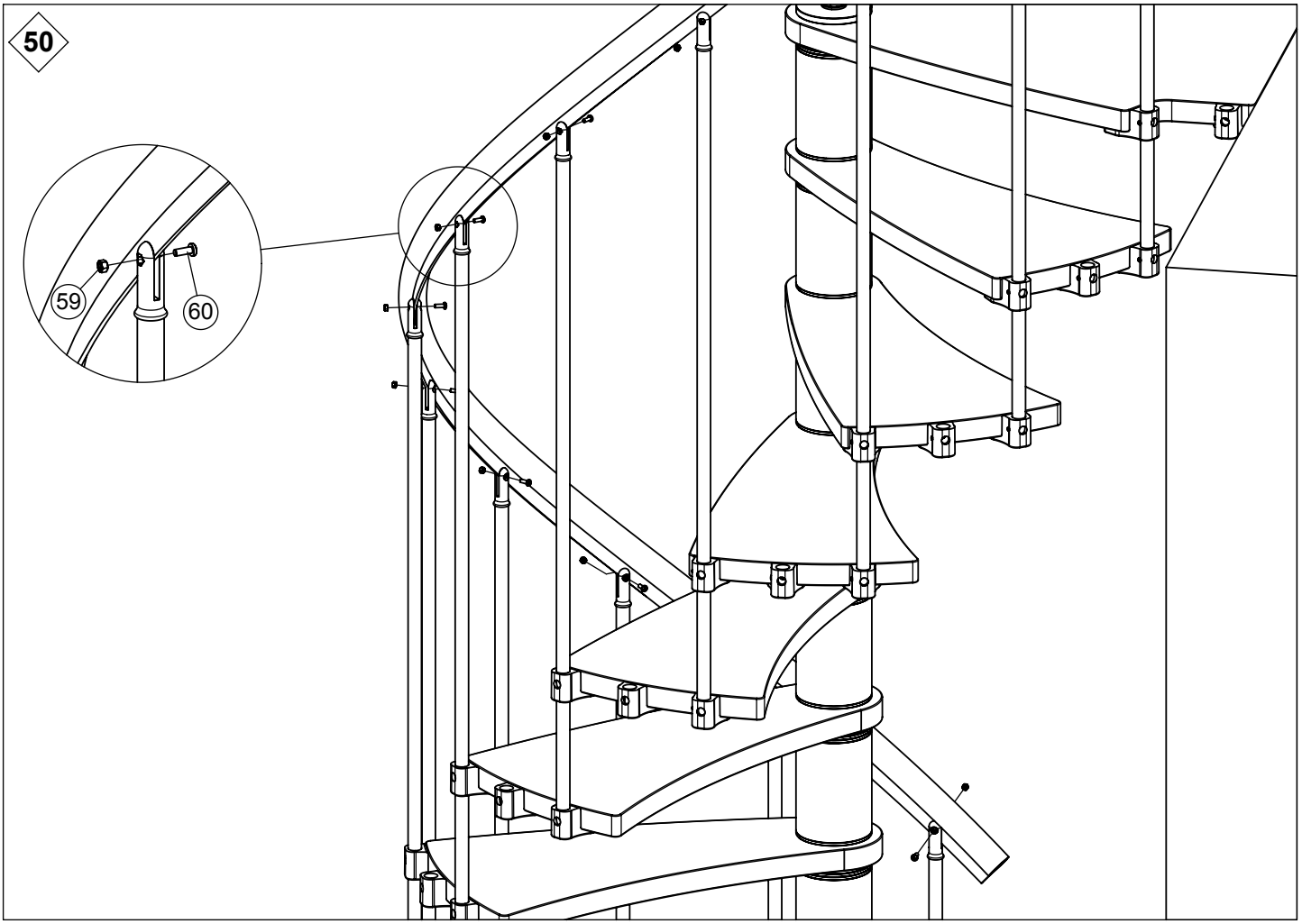
50
59
60

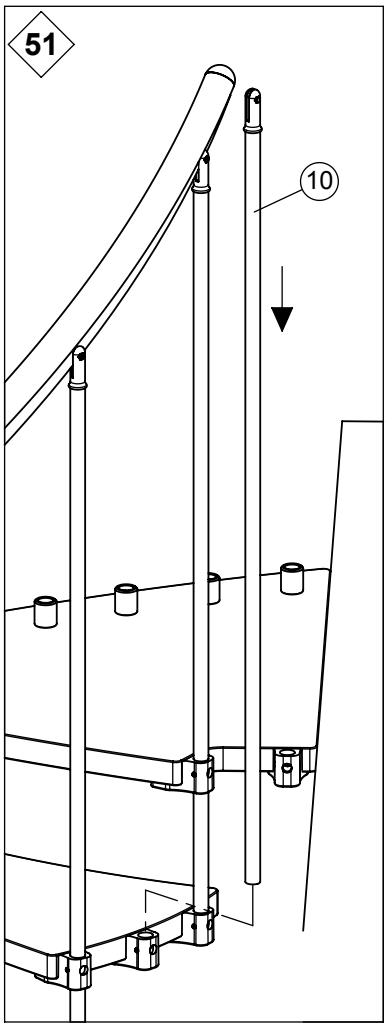
51
10

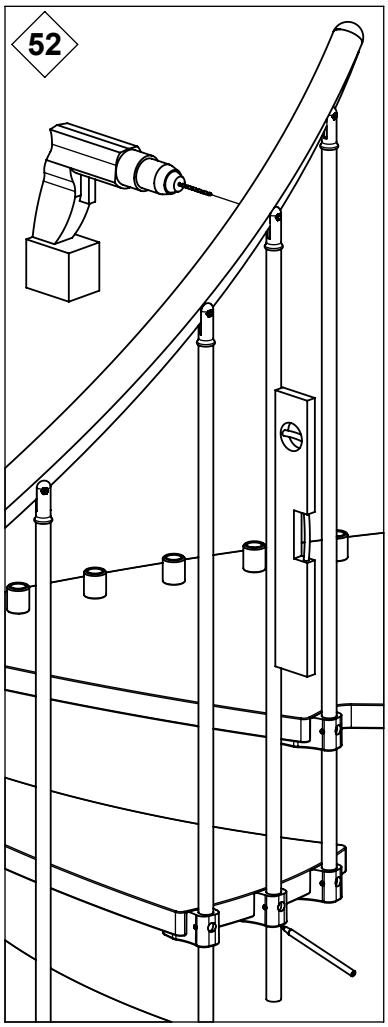
52

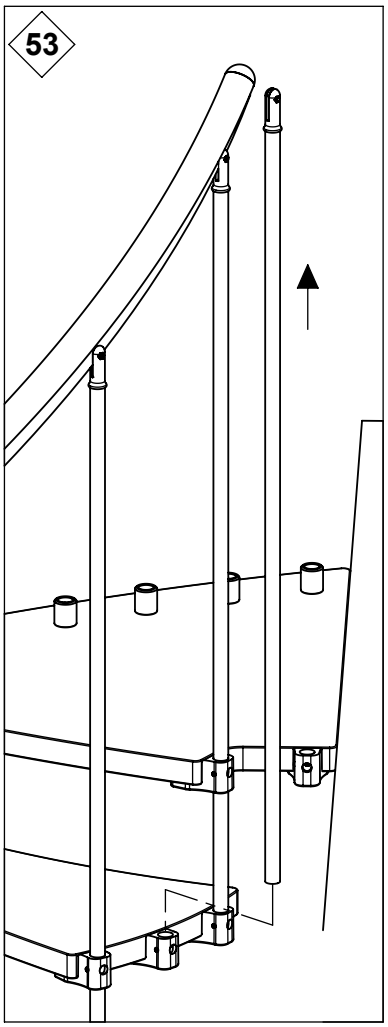
53

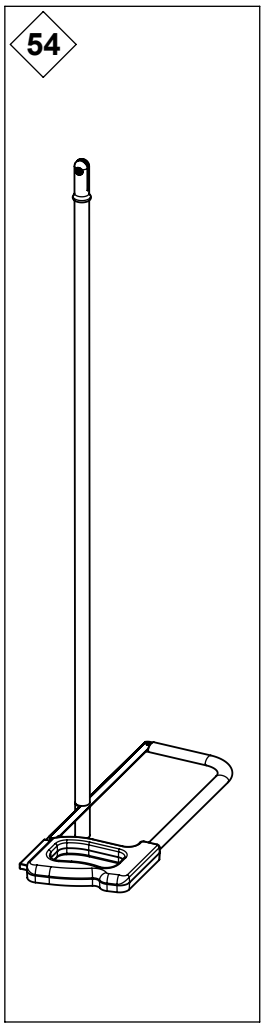
54

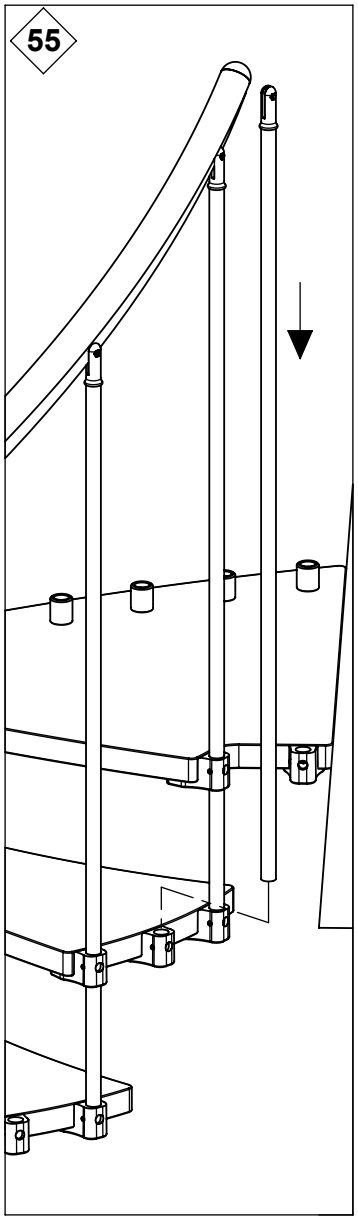
55

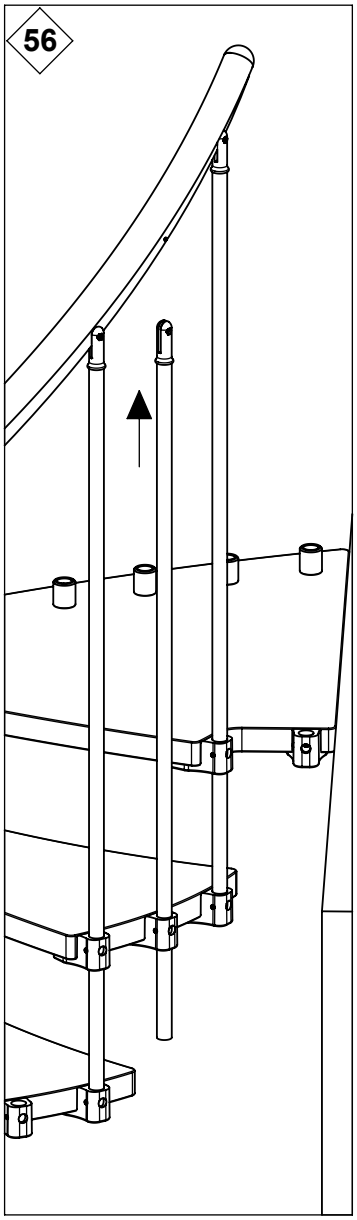
56

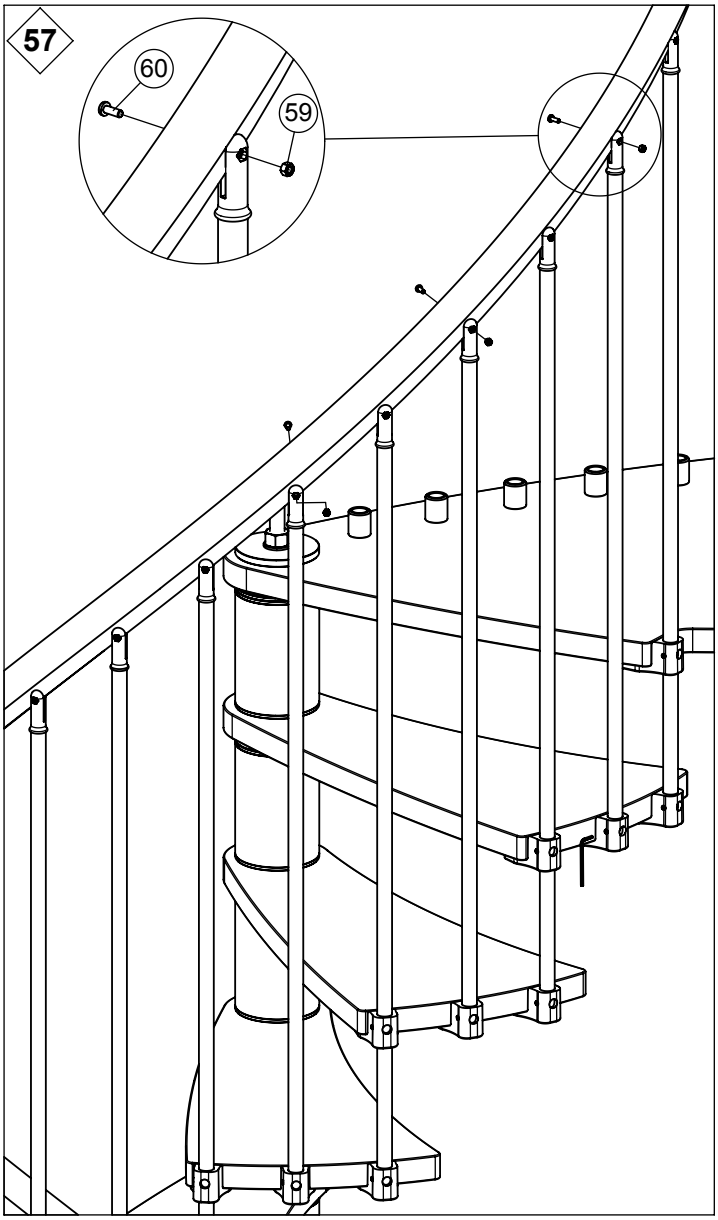
57
60
59

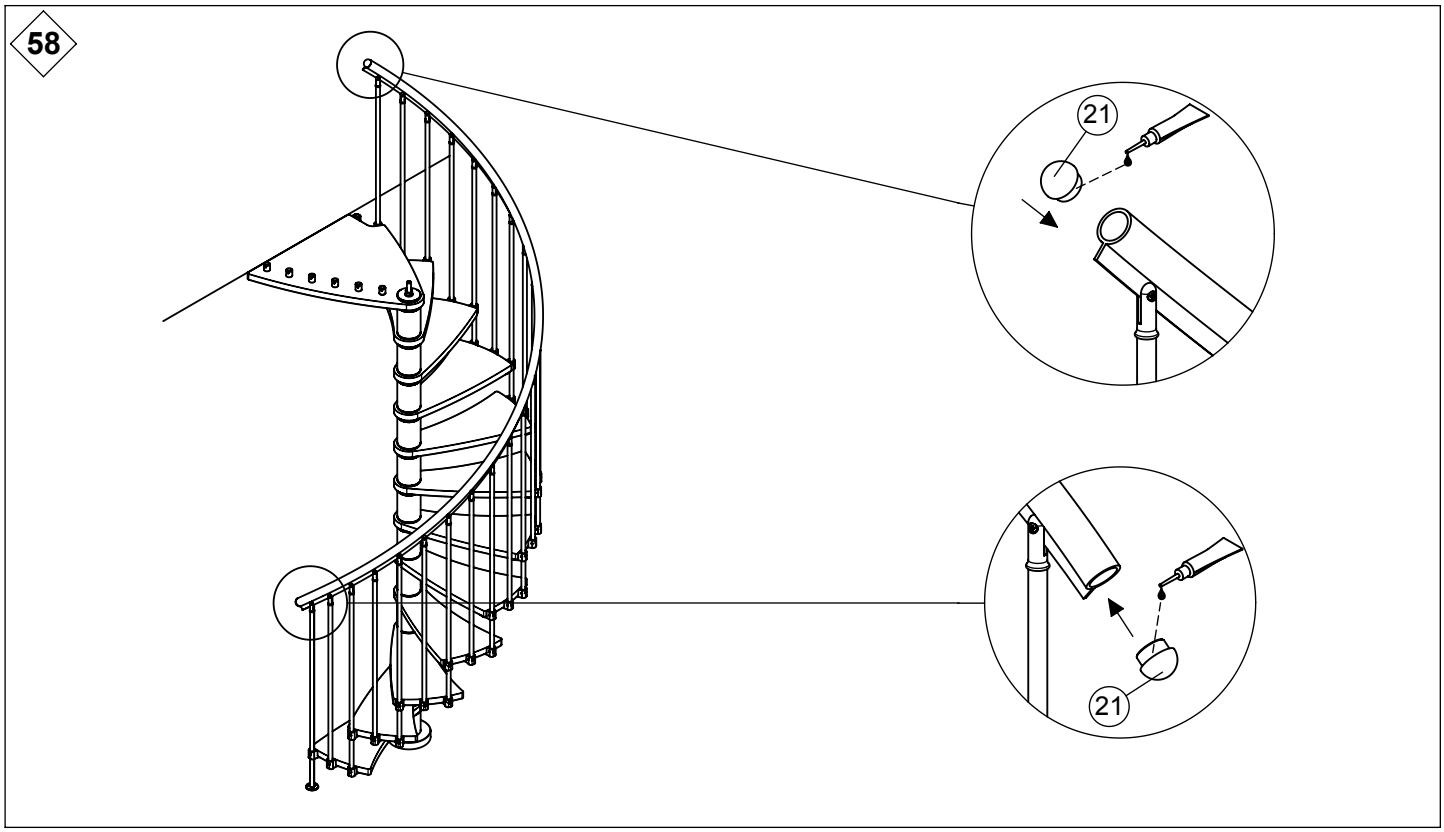
58
21
21

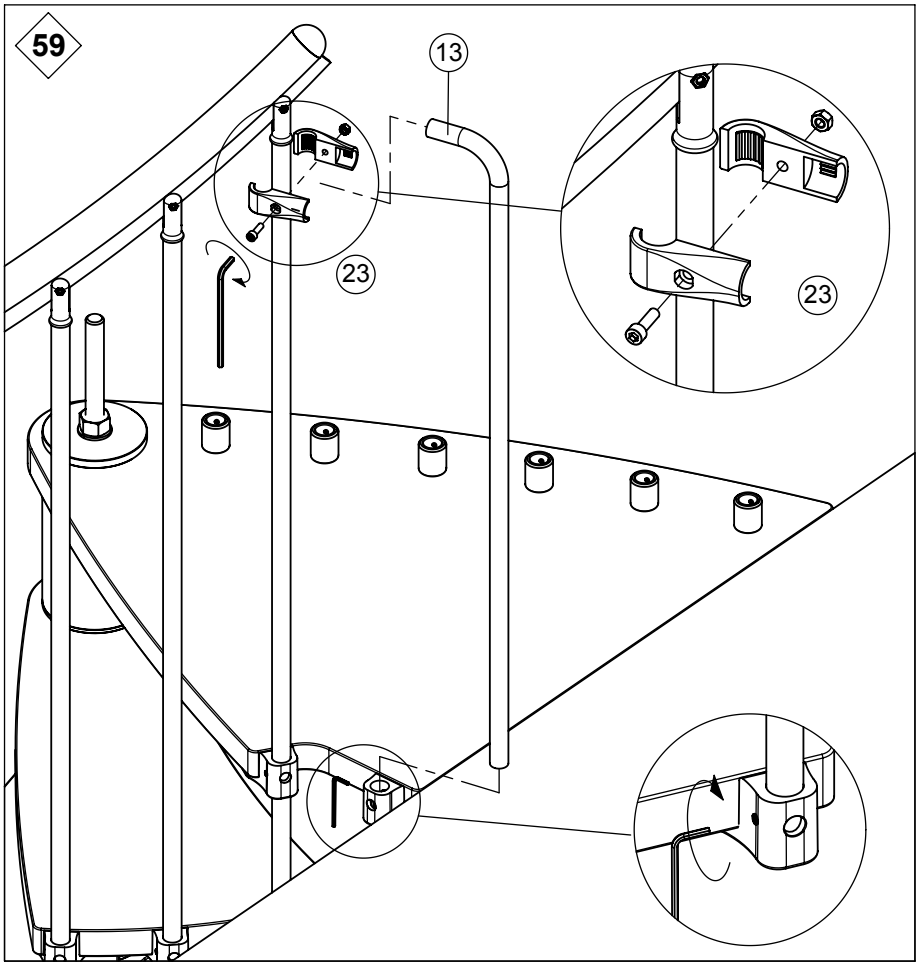
59
13
23
23

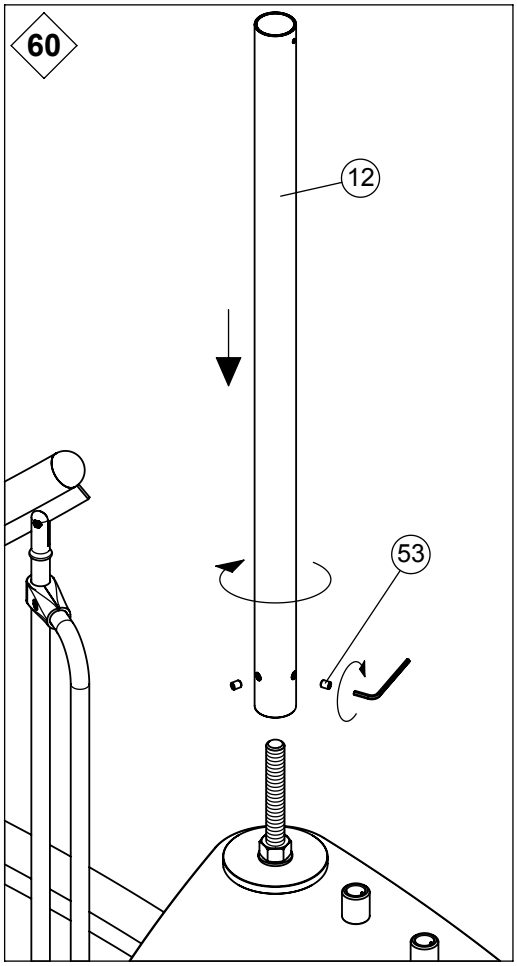
60
12
53

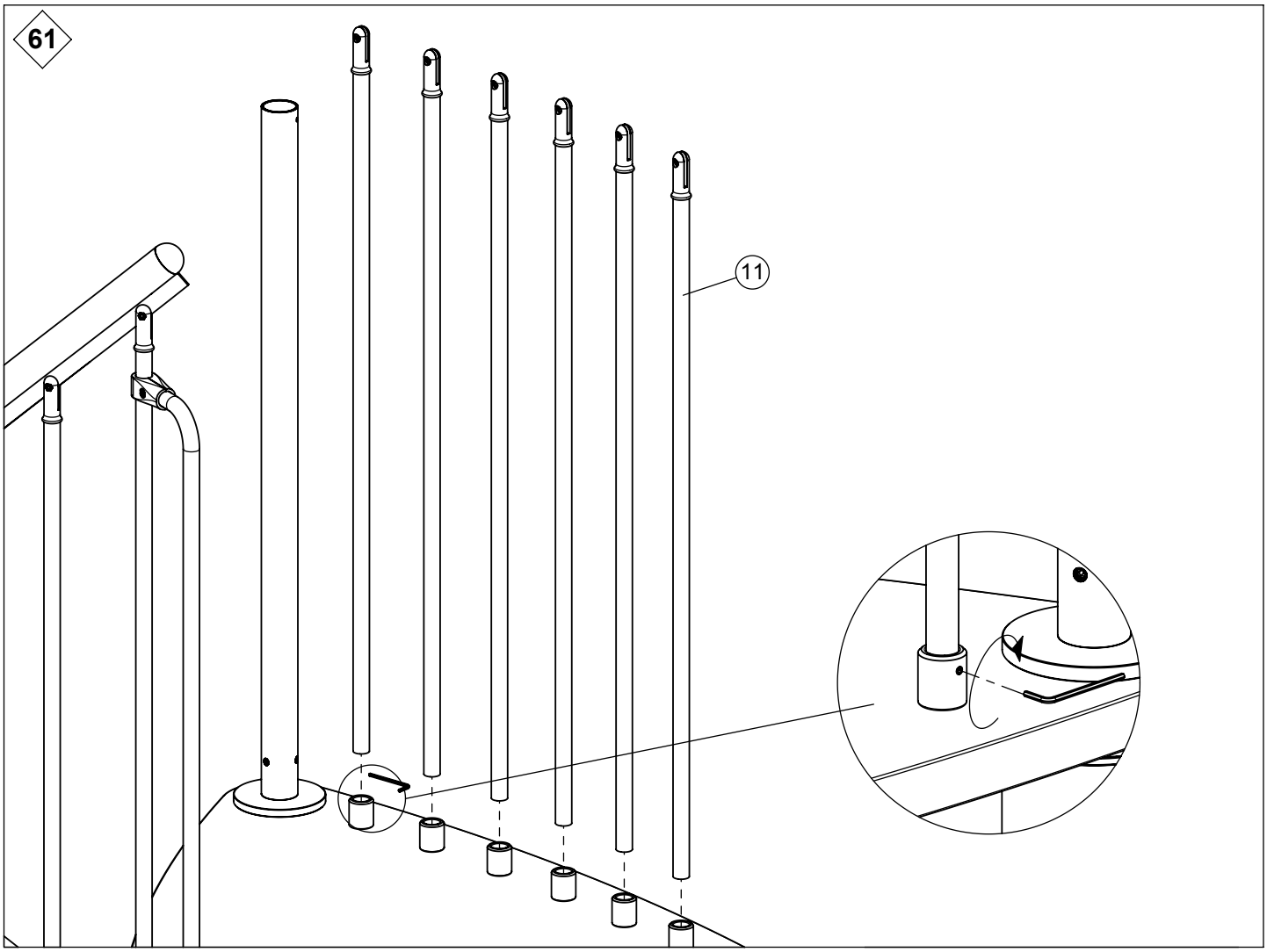
61
11

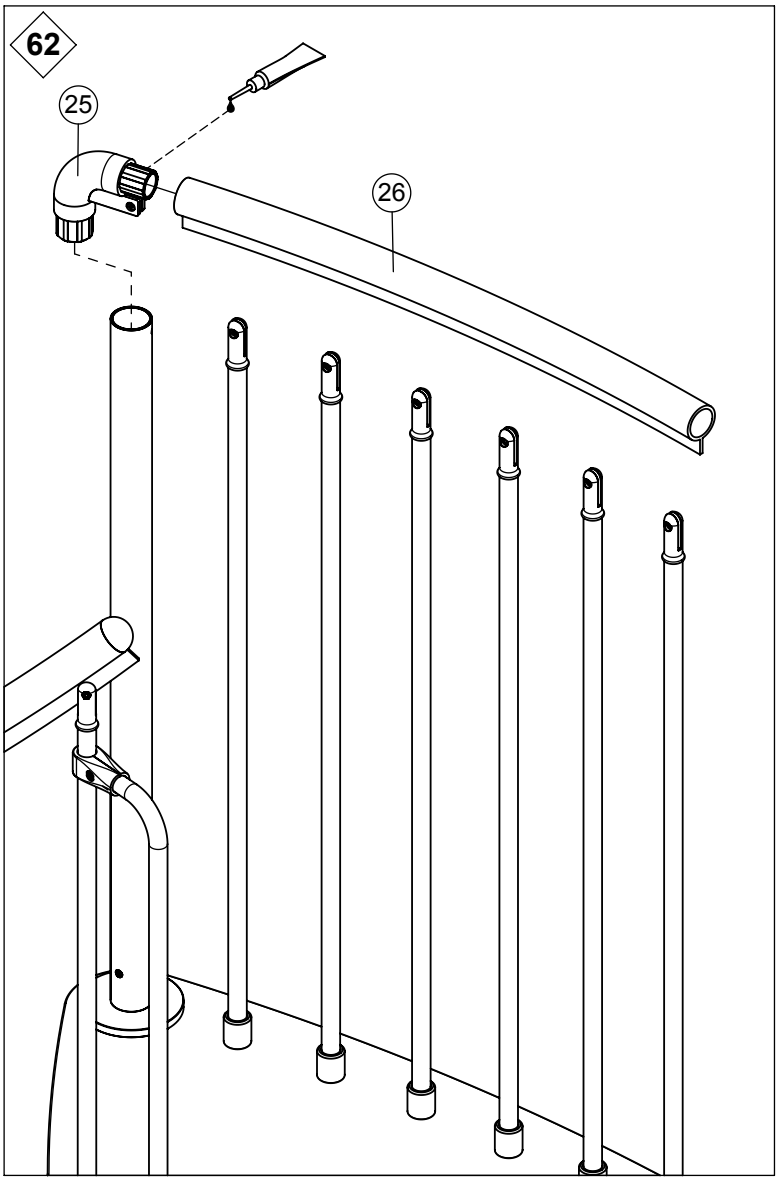
62
25
26

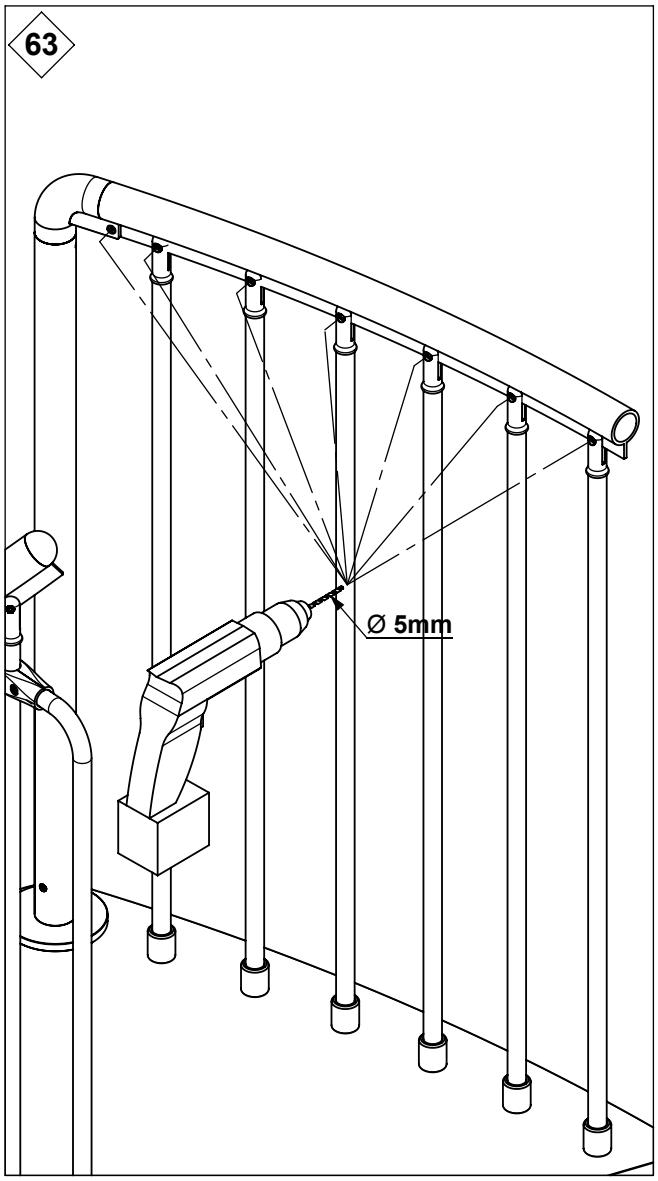
63
Ø 5mm

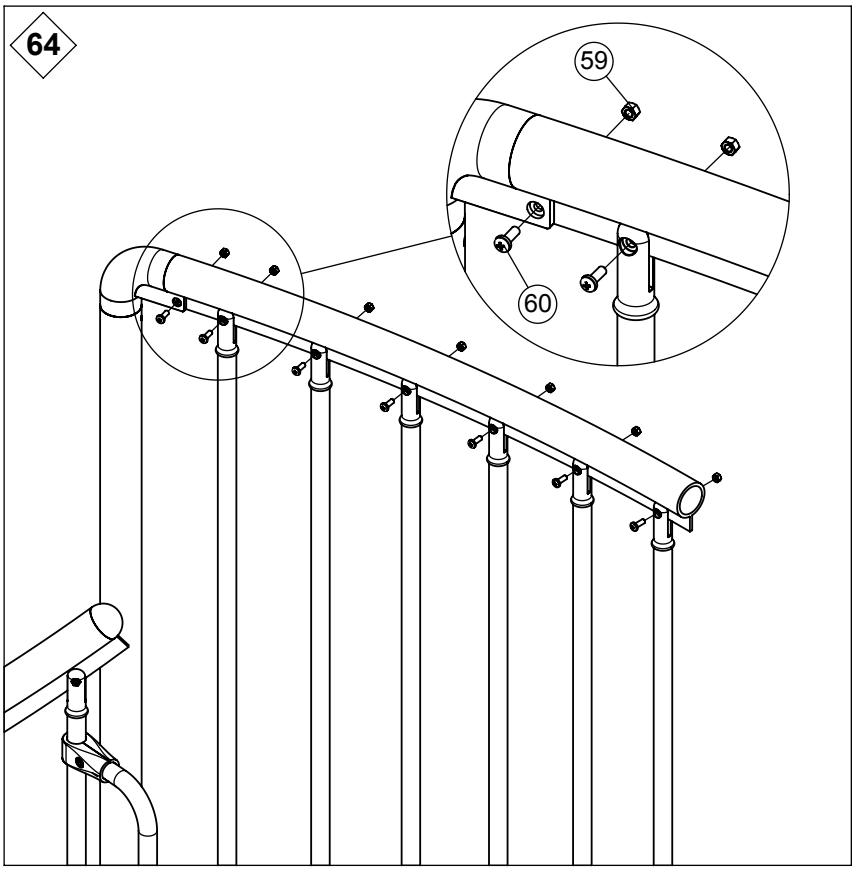
64
59
60

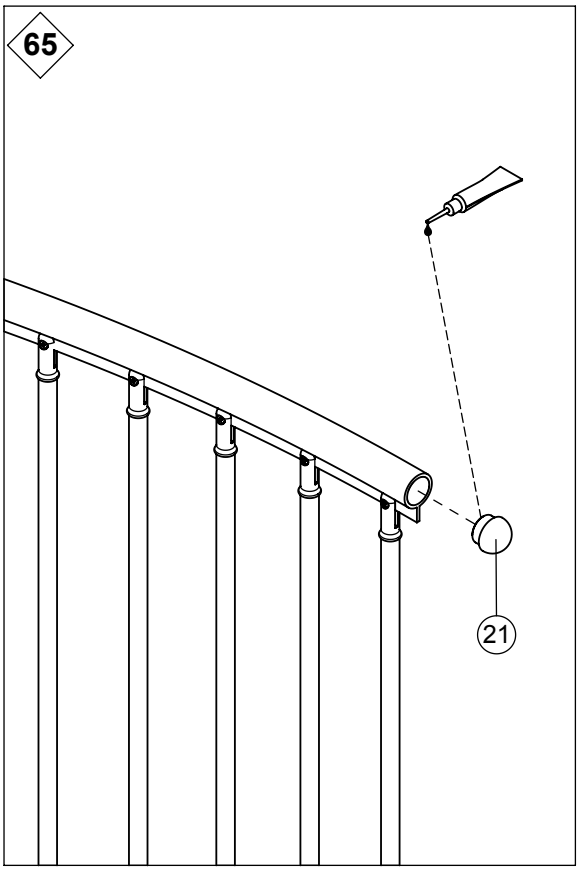
65
21

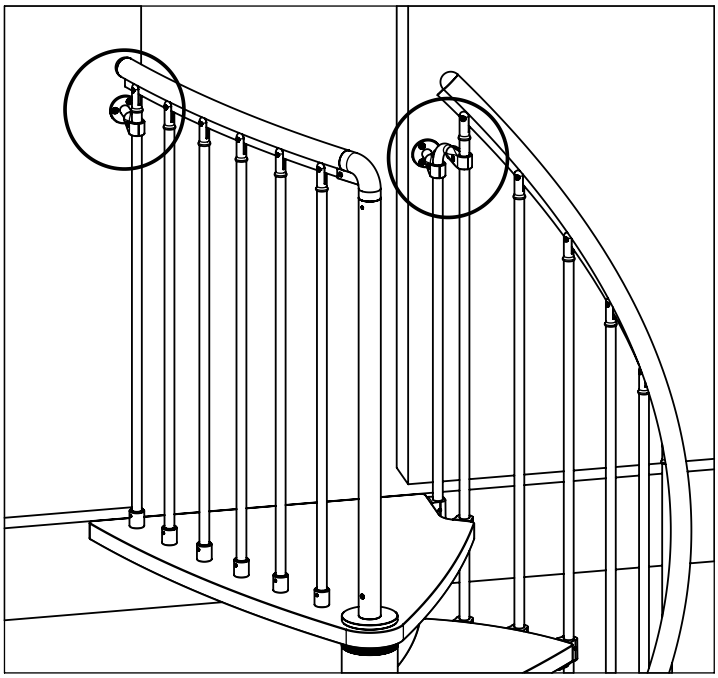

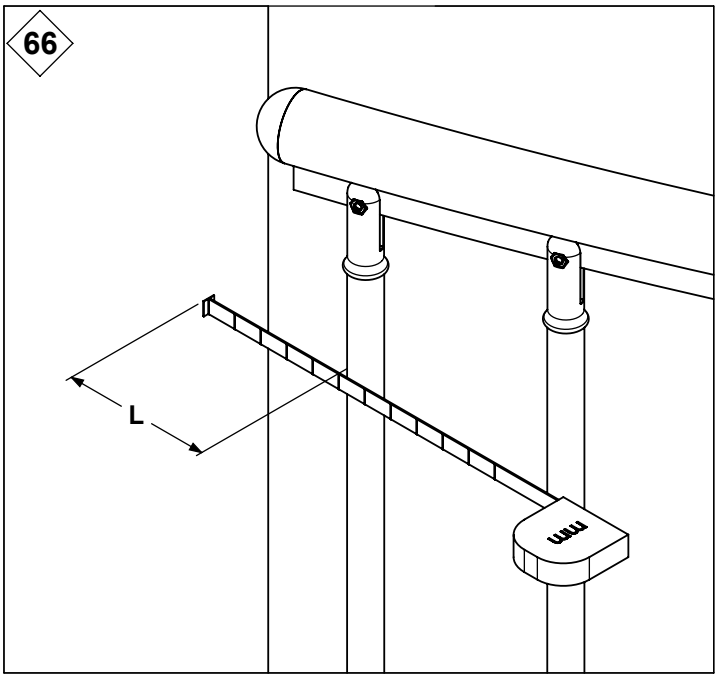
66
L

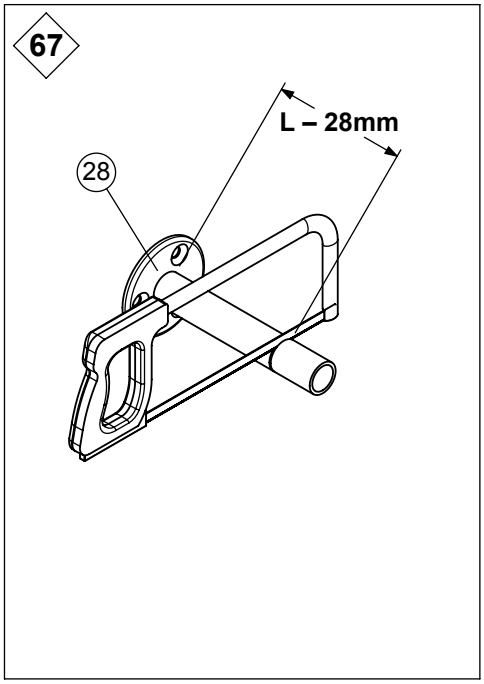
67
L – 28mm
28

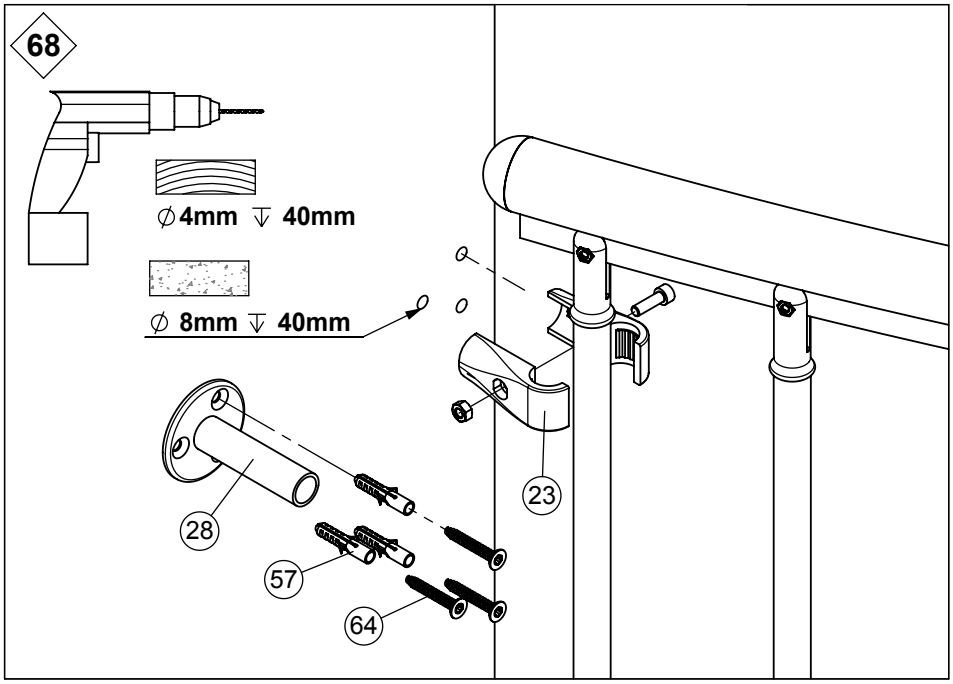
68
∅4mm ↓ 40mm
∅ 8mm ↓ 40mm
28
57
64
23

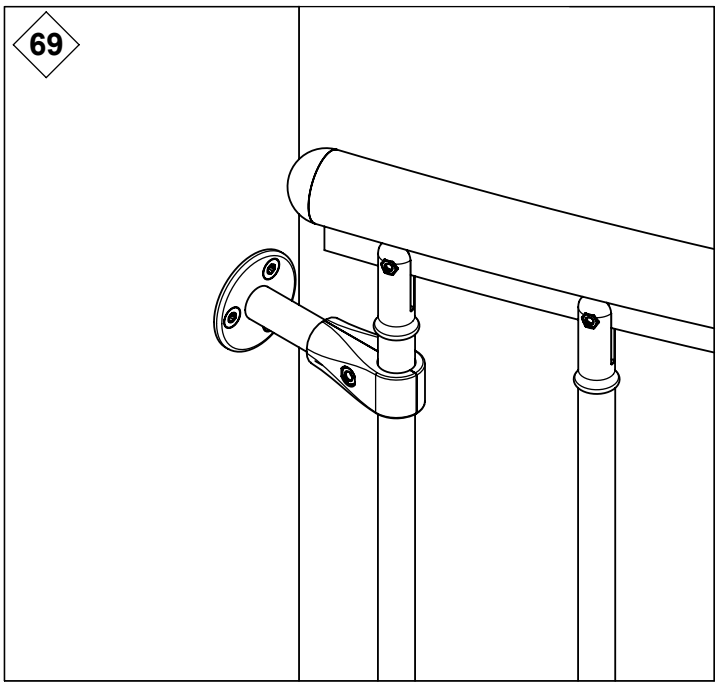
69

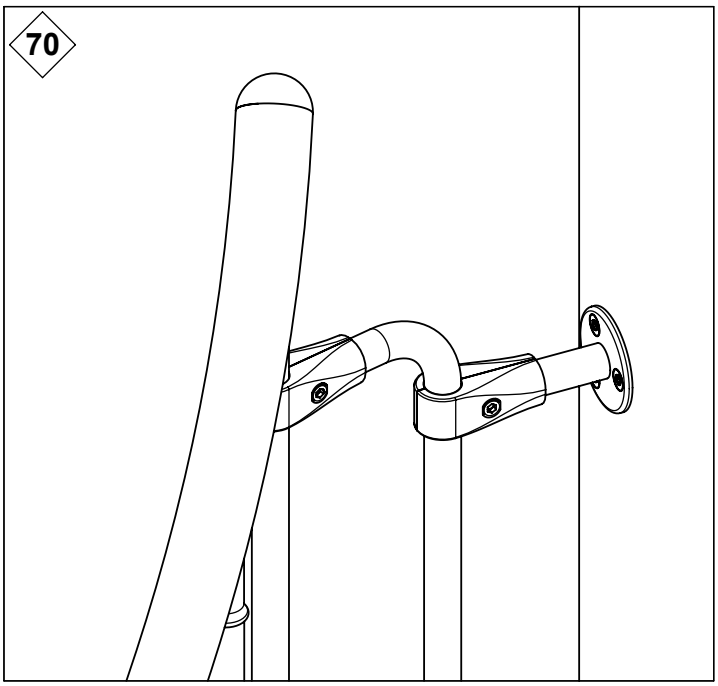
70

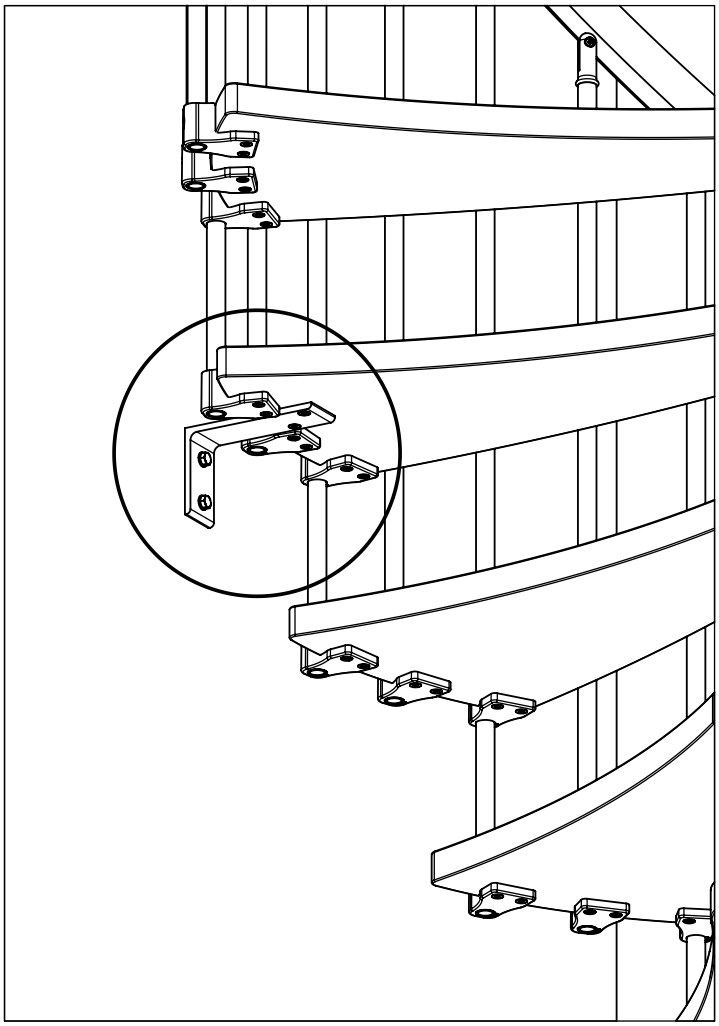

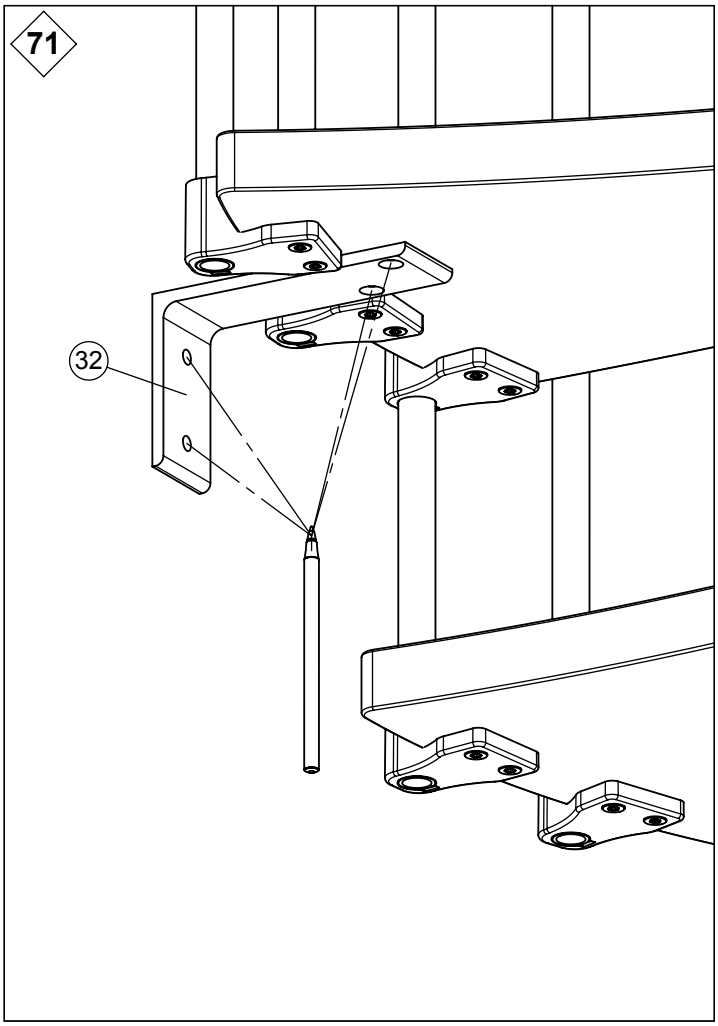
71
32

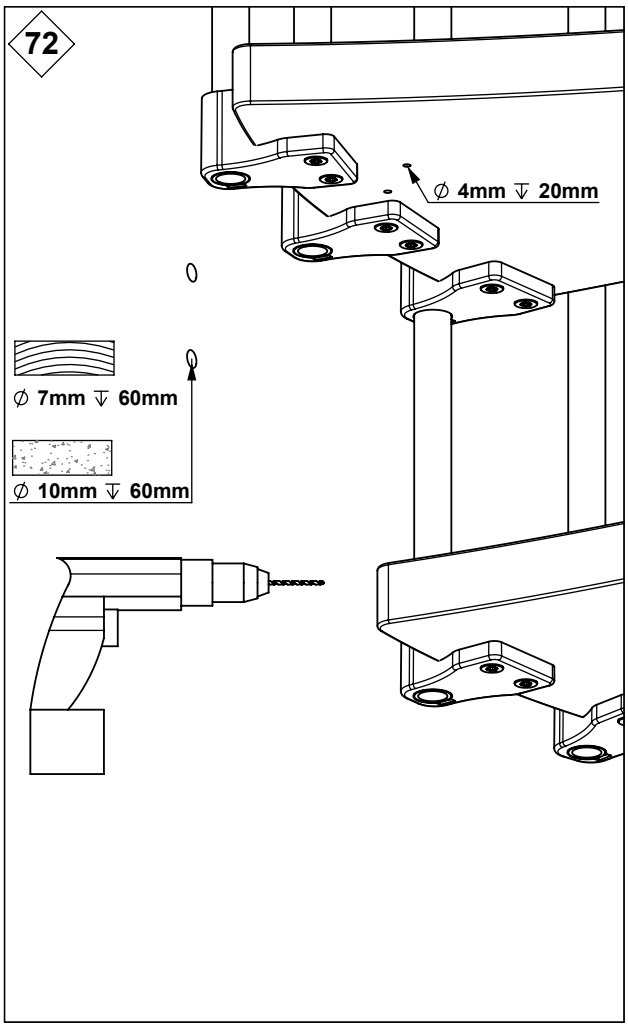
72
∅ 4mm ↓ 20mm
∅ 7mm ↓ 60mm
∅ 10mm ↓ 60mm

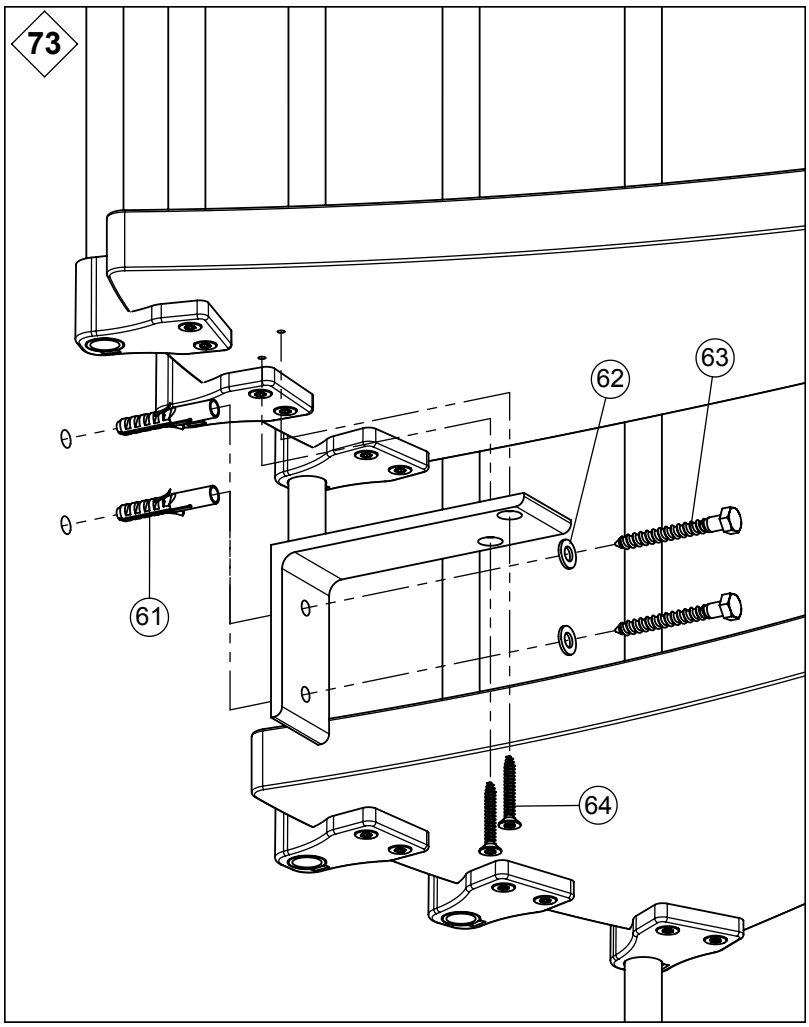
73
62
63
61
64