DOLLE

Einbauanleitung - Spindeltreppe Valencia - Handlauf flach

Installation instruction - Valencia

Notice de montage Valencia

Montagevejledning Valencia

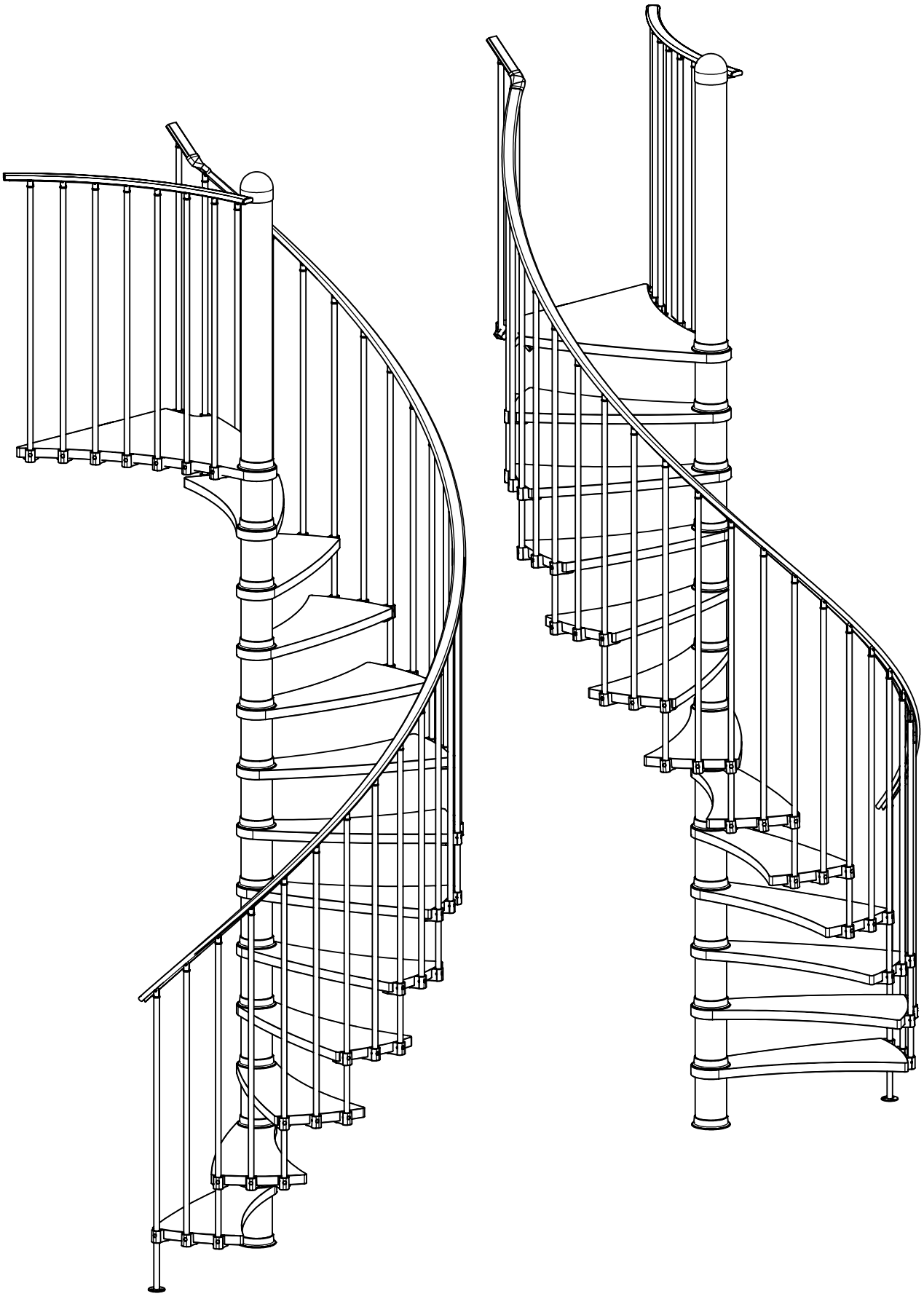

R1-99800-00 / 07-06-2007 / Rev. 3-08-2009 / Rev. 09-11-2009

① 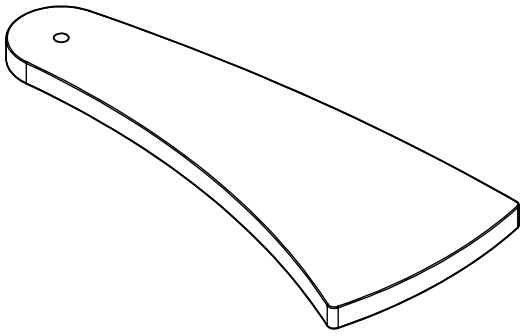

K1-19010: Ø130cm
K1-19020: Ø150cm
12 st | pcs

② 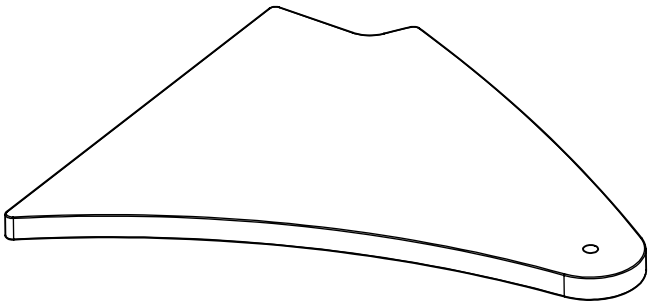

K1-19061: Ø130cm
K1-19071: Ø150cm
1 st | pcs

③ 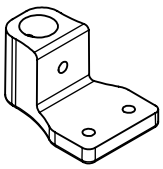

K1-19160
Ø130cm: 44 st | pcs
Ø150cm: 45 st | pcs

④ 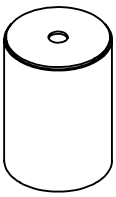

K2-19140
13 st | pcs

⑤ 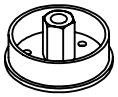

K2-19100
1 st | pcs

⑥

K1-14011
65 st | pcs

⑦ 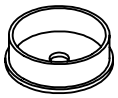

K2-19130
13 st | pcs

⑧ 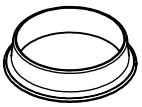

K1-19120
14 st | pcs

⑨

K3-07012
3 st | pcs

⑩ 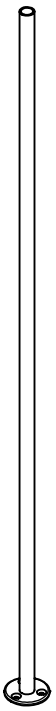

K2-19180
1 st | pcs

⑪

K1-19200
12 st | pcs

⑫

K1-19190
Ø130cm: 19 st | pcs
Ø150cm: 20 st | pcs

⑬ 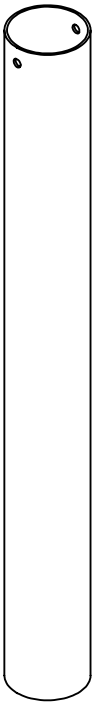

K2-19230
1 st | pcs

⑭ 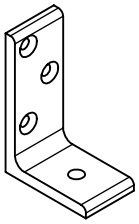

K1-19350
3 st | pcs

⑮ 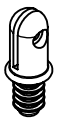

K1-19170
Ø130cm: 32 st | pcs
Ø150cm: 33 st | pcs

⑯ 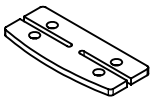

K1-19290
3 st | pcs

⑰ 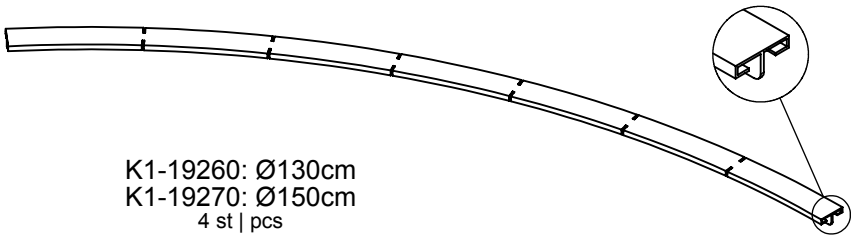

K1-19260: Ø130cm
K1-19270: Ø150cm
4 st | pcs

⑱ 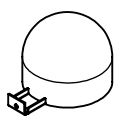

K2-19240
1 st | pcs

⑲

K1-19320
4 st | pcs

⑳ 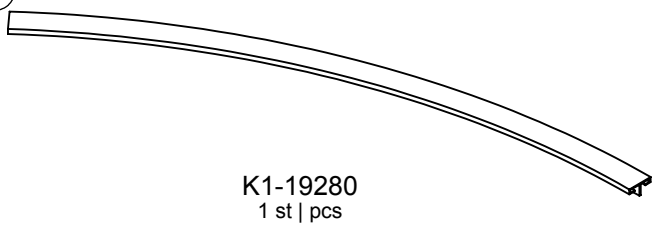

K1-19280
1 st | pcs

㉑

K1-19400
1 st | pcs

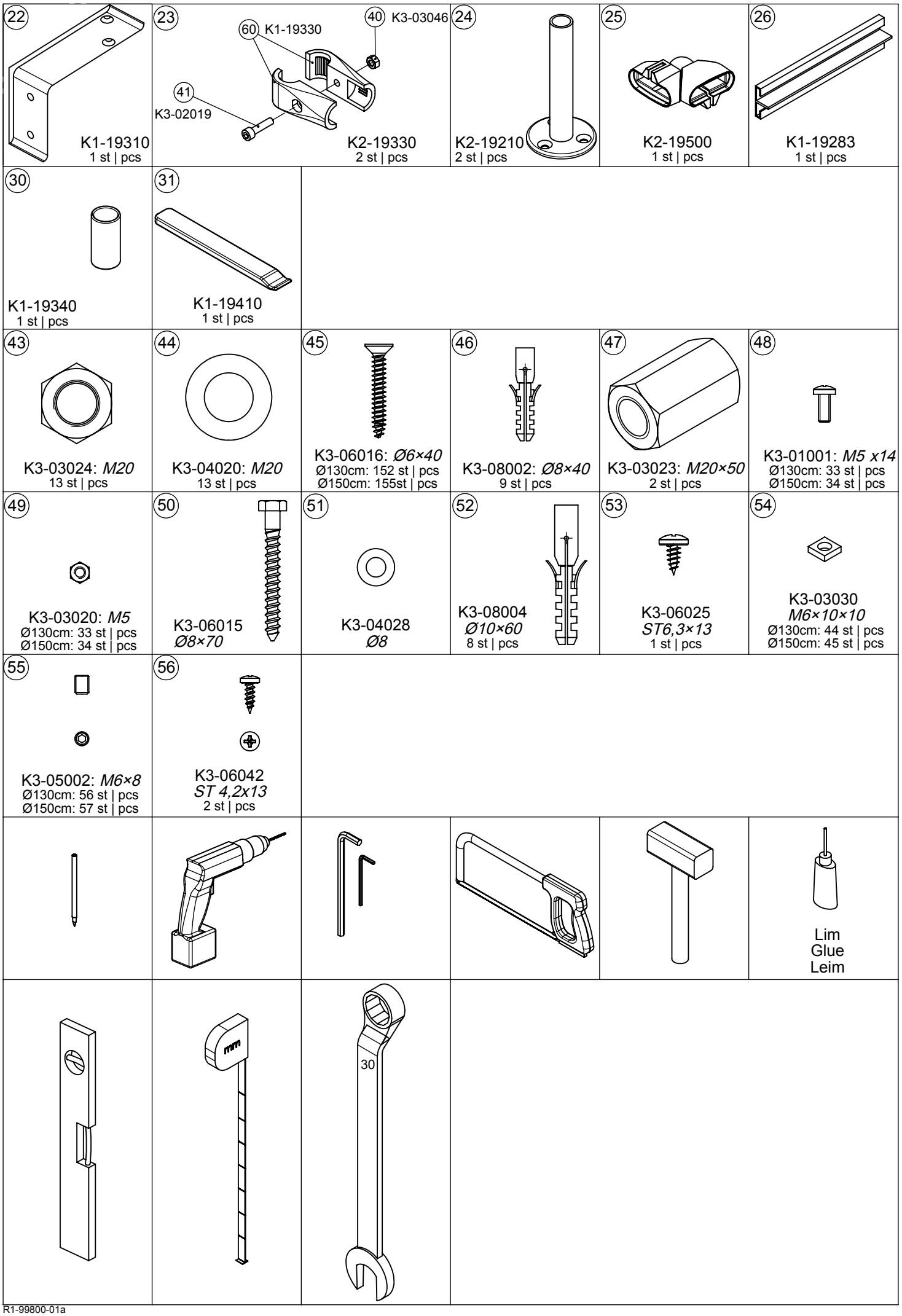
22
K1-19310
1 st | pcs
23
60 K1-19330
40 K3-03046
41
K3-02019
K2-19330
2 st | pcs
24
K2-19210
2 st | pcs
25
K2-19500
1 st | pcs
26
K1-19283
1 st | pcs
30
K1-19340
1 st | pcs
31
K1-19410
1 st | pcs
43
K3-03024: M20
13 st | pcs
44
K3-04020: M20
13 st | pcs
45
K3-06016: Ø6×40
Ø130cm: 152 st | pcs
Ø150cm: 155st | pcs
46
K3-08002: Ø8×40
9 st | pcs
47
K3-03023: M20×50
2 st | pcs
48
K3-01001: M5 x14
Ø130cm: 33 st | pcs
Ø150cm: 34 st | pcs
49
K3-03020: M5
Ø130cm: 33 st | pcs
Ø150cm: 34 st | pcs
50
K3-06015
Ø8×70
51
K3-04028
Ø8
52
K3-08004
Ø10×60
8 st | pcs
53
K3-06025
ST6,3×13
1 st | pcs
54
K3-03030
M6×10×10
Ø130cm: 44 st | pcs
Ø150cm: 45 st | pcs
55
K3-05002: M6×8
Ø130cm: 56 st | pcs
Ø150cm: 57 st | pcs
56
K3-06042
ST 4,2x13
2 st | pcs
Lim
Glue
Leim
mm
30

Ø 130 cm	S	V	A	B	C
	mm	°	mm	mm	mm
	120	21,6	481	596	700
	125	22,6	364	539	700
	130	23,5	267	465	700
	135	24,4	187	375	700
	140	25,3	126	272	700

Ø 150 cm	S	V	A	B	C
	mm	°	mm	mm	mm
	120	18,7	1005	706	800
	125	19,5	882	731	800
	130	20,3	762	734	800
	135	21,1	643	718	800
	140	21,8	537	687	800

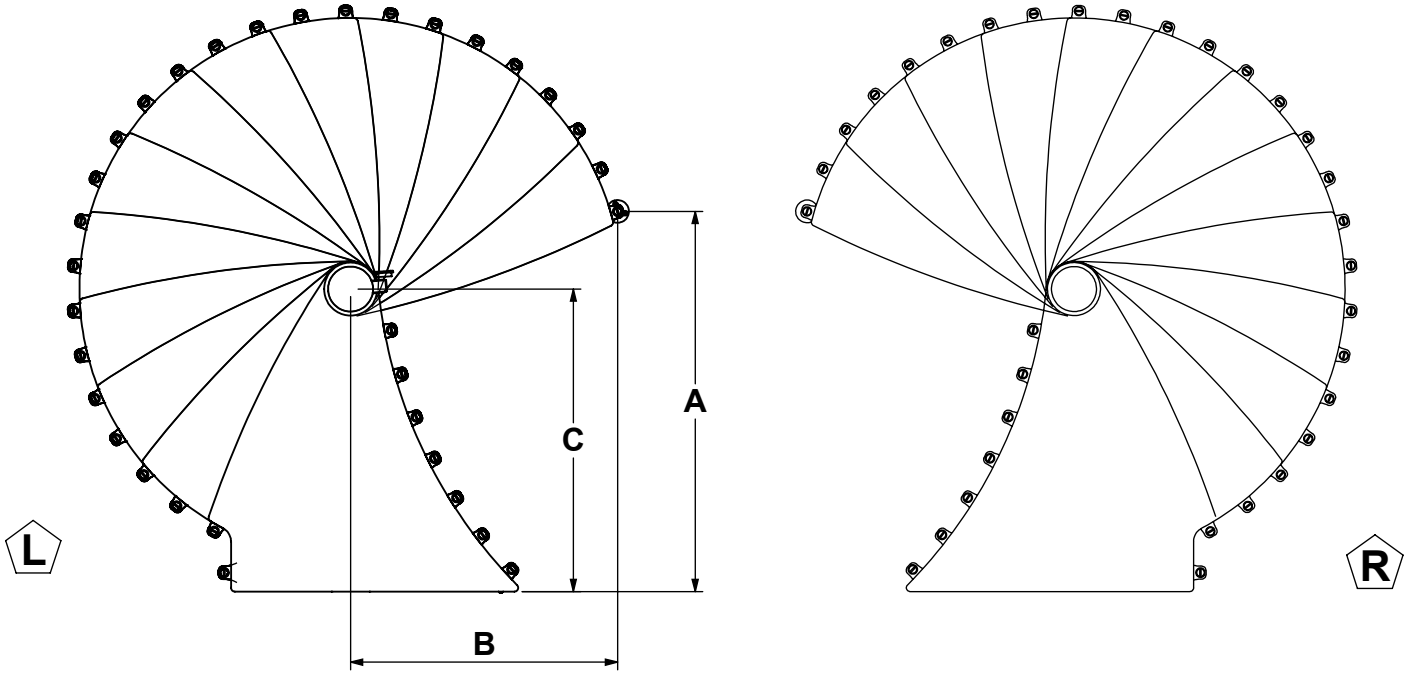

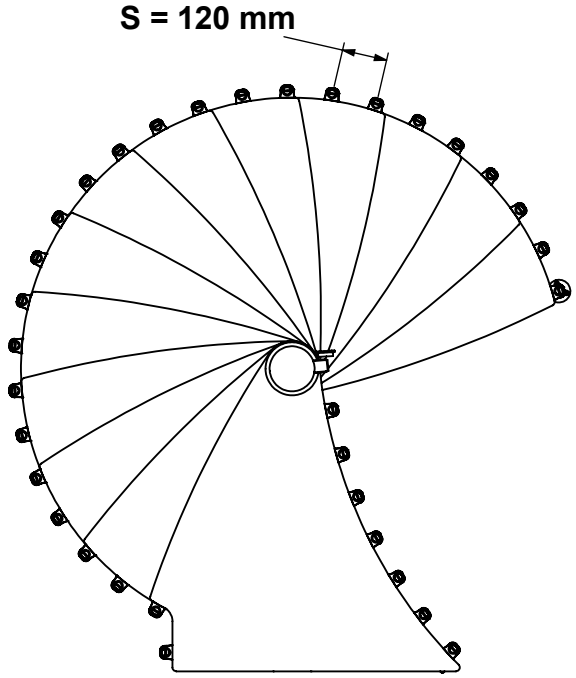

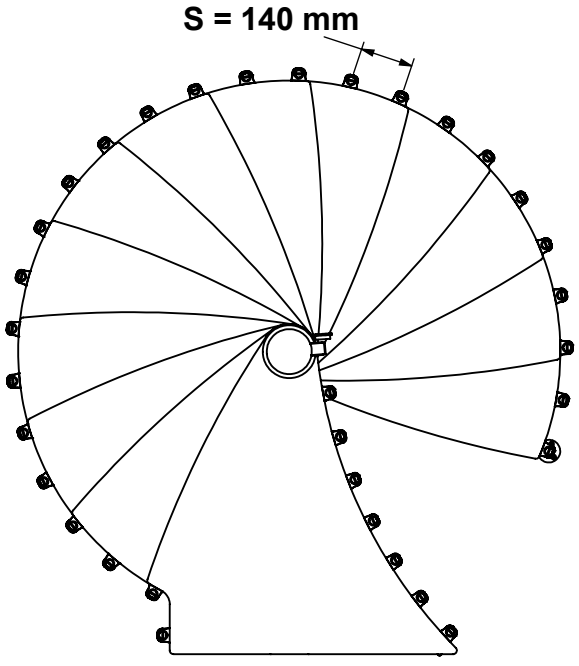

1

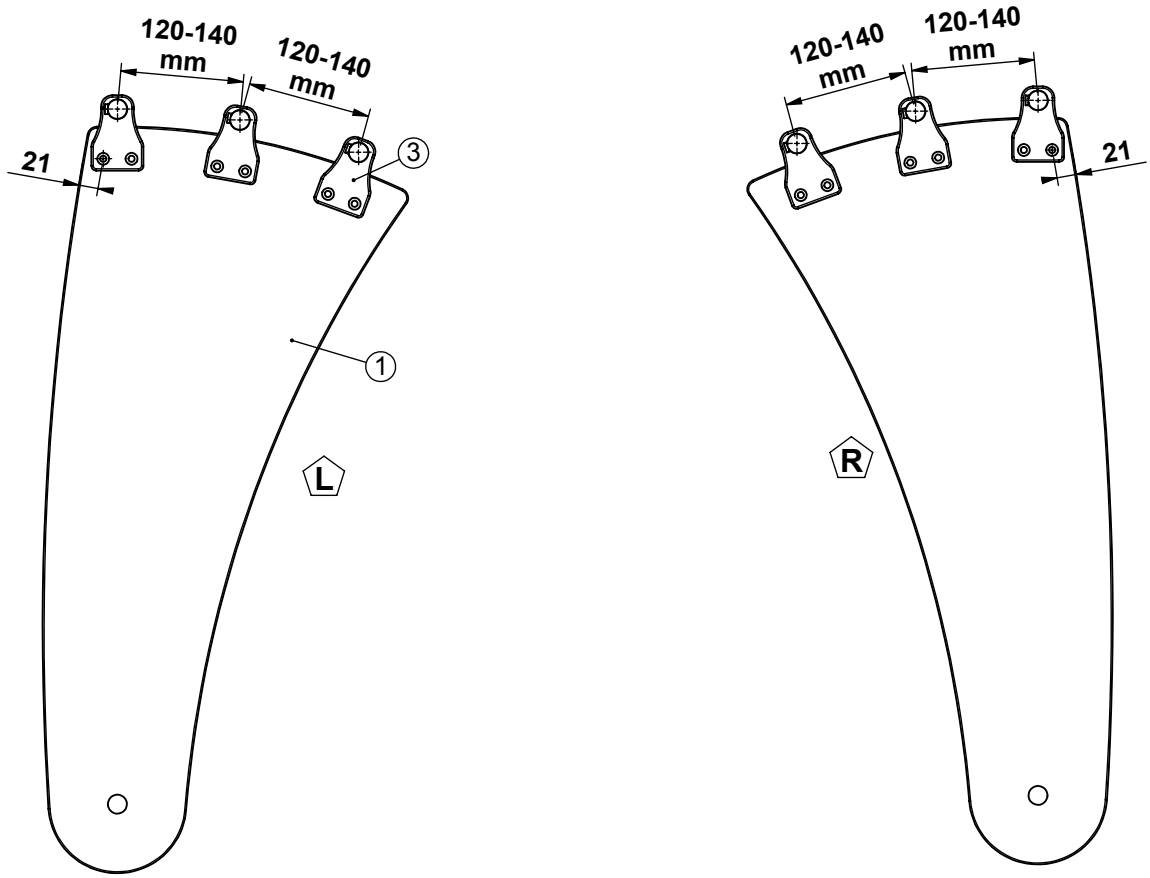
120-140
mm
120-140
mm
21
3
1
L
120-140
mm
120-140
mm
21
R

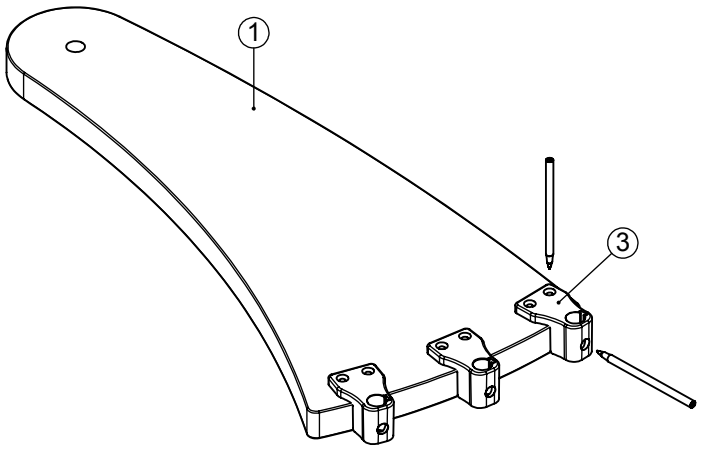
1
3

2

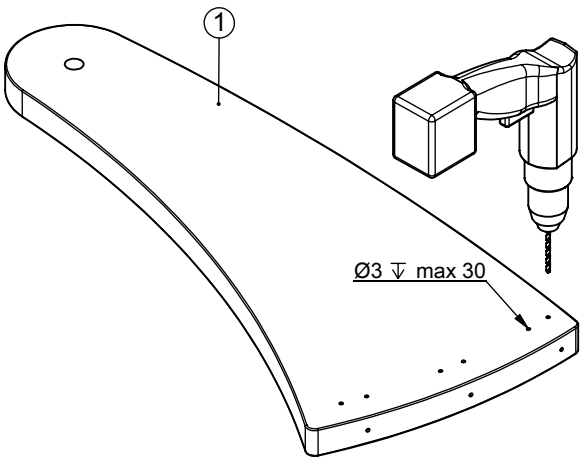
1
Ø3 ⇩ max 30

3

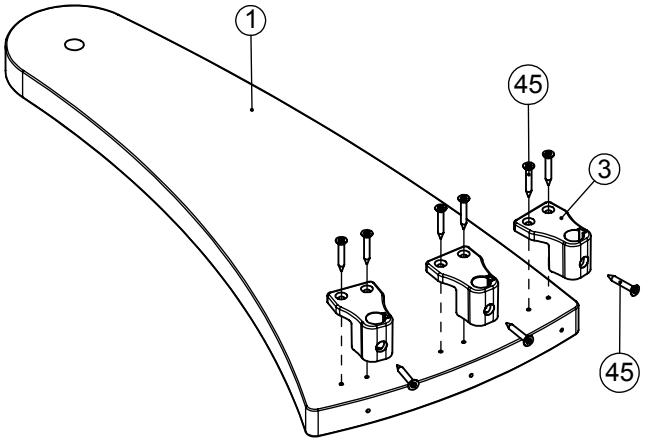
1
45
3
45

4

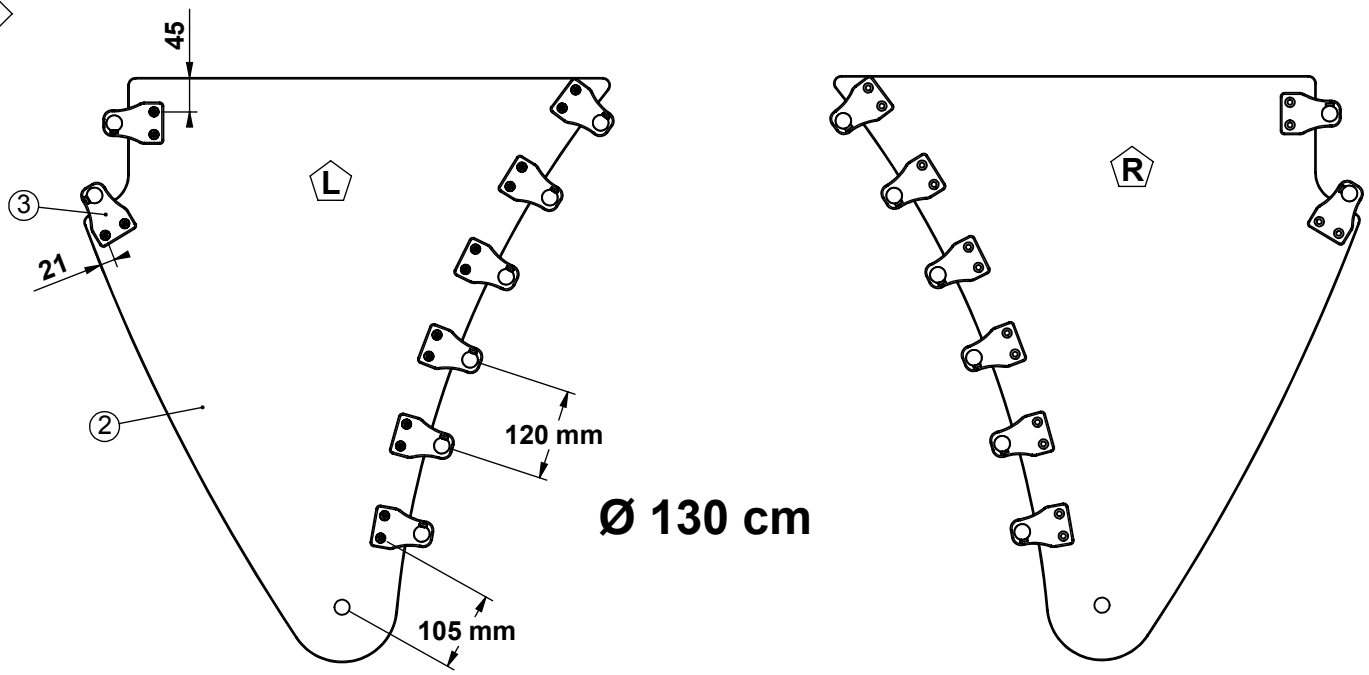

Ø 130 cm

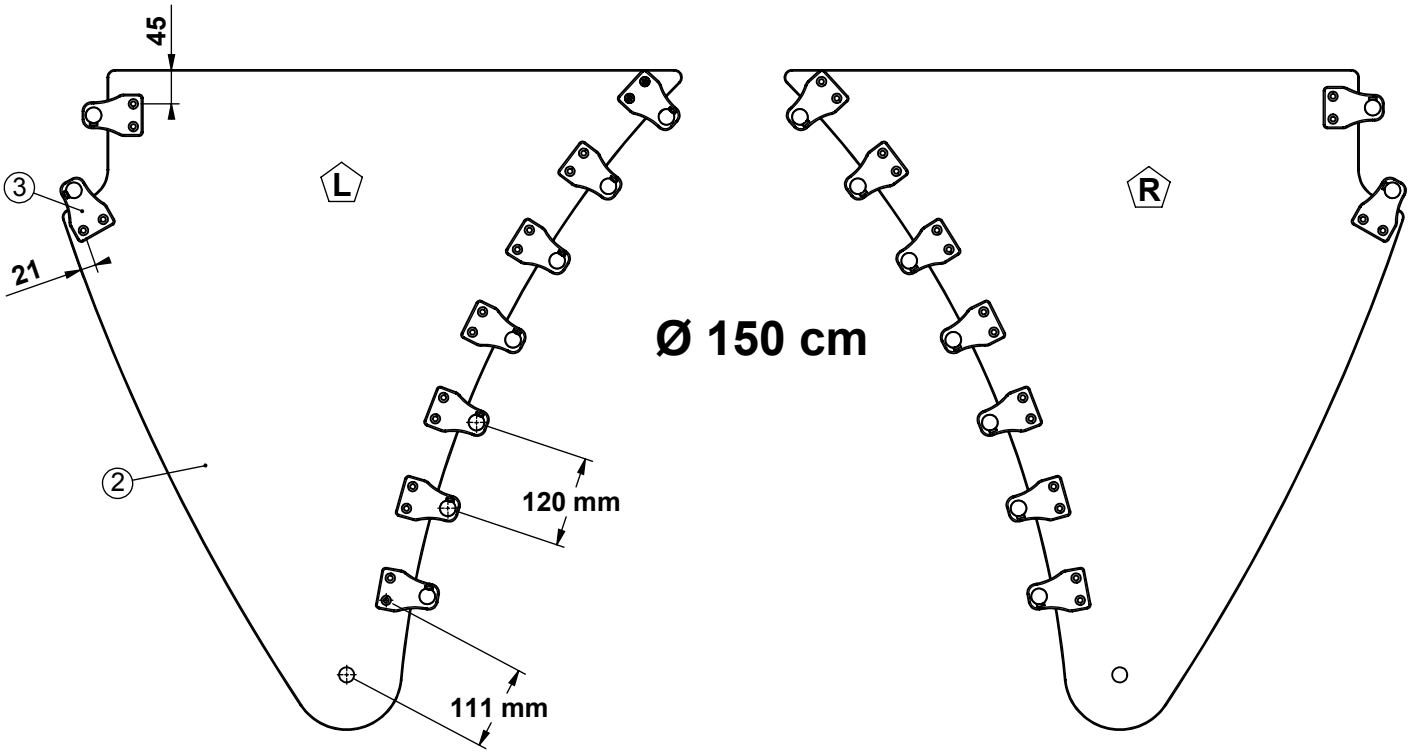

Ø 150 cm

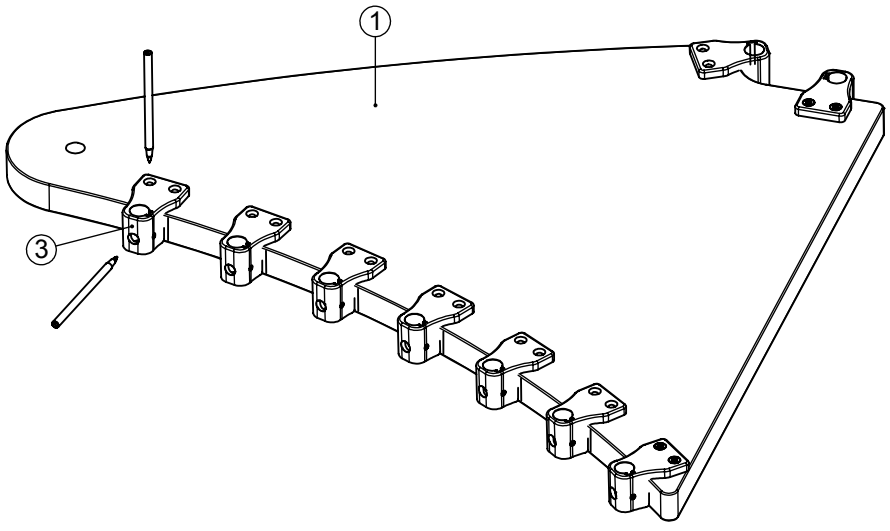

5

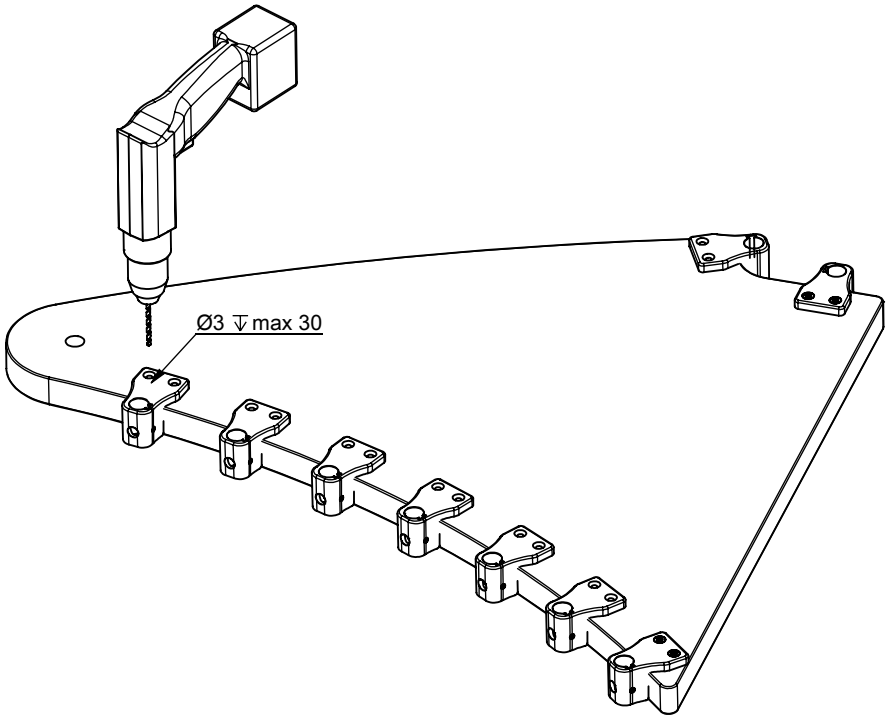

6

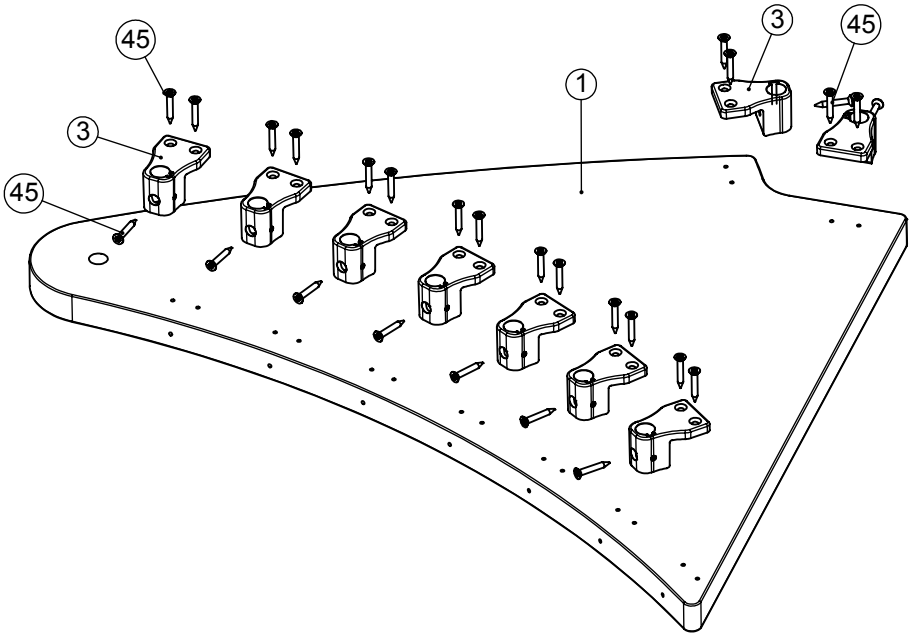

200 mm

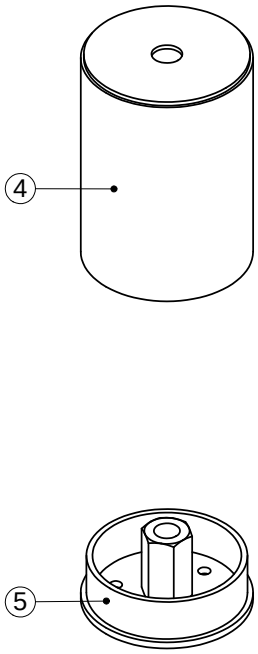

205 mm

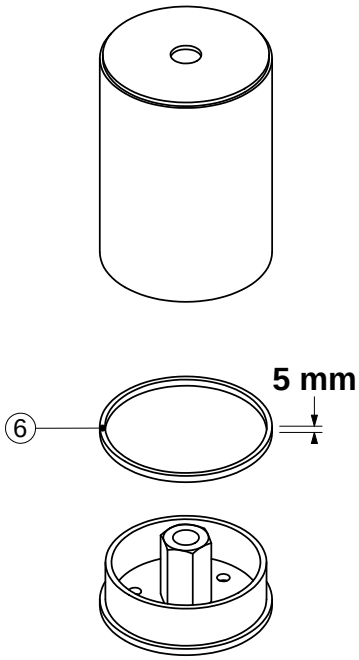

210 mm

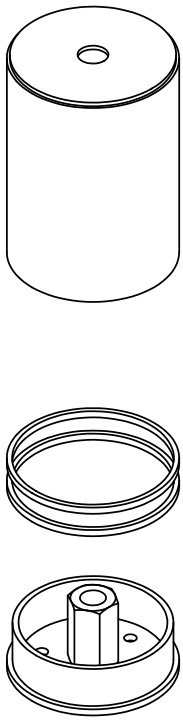

215 mm

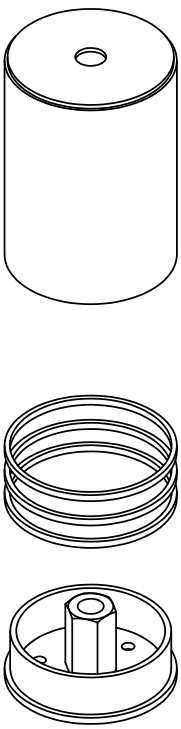

220 mm

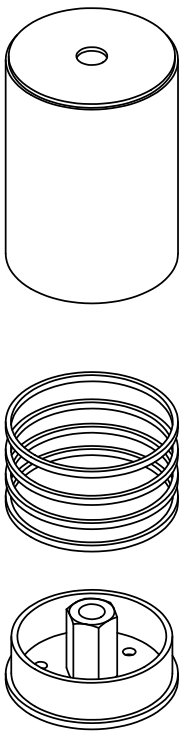

225 mm

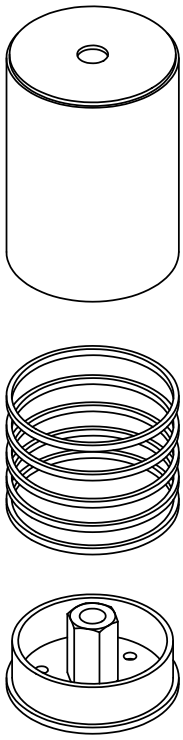

200 mm

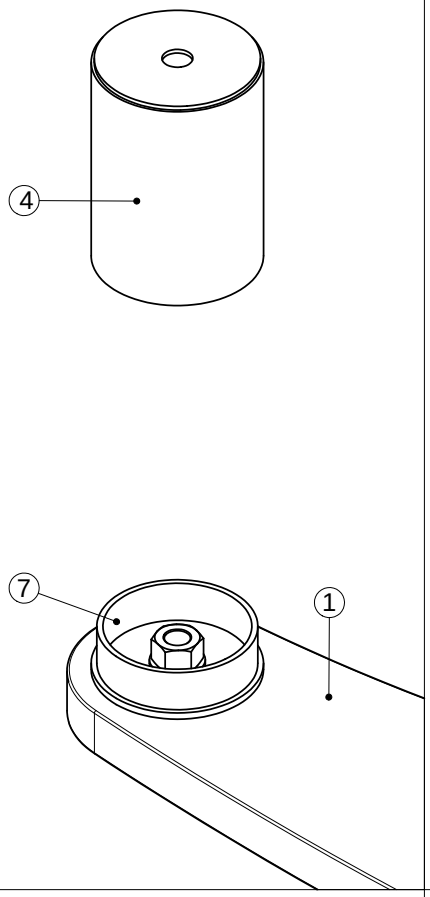

205 mm

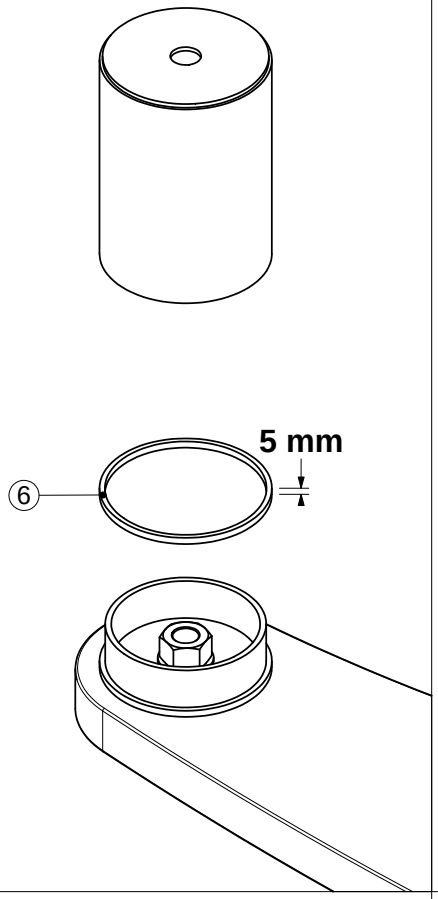

210 mm

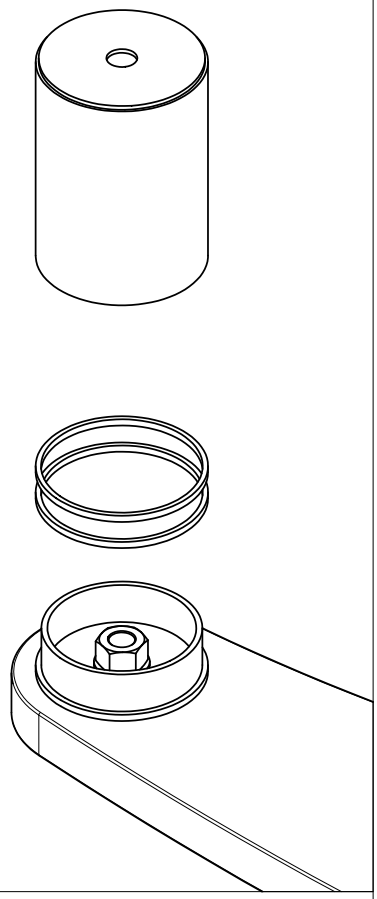

215 mm

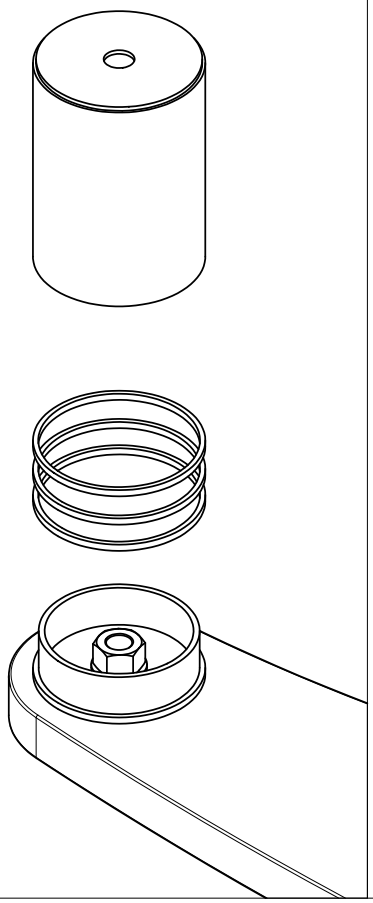

220 mm

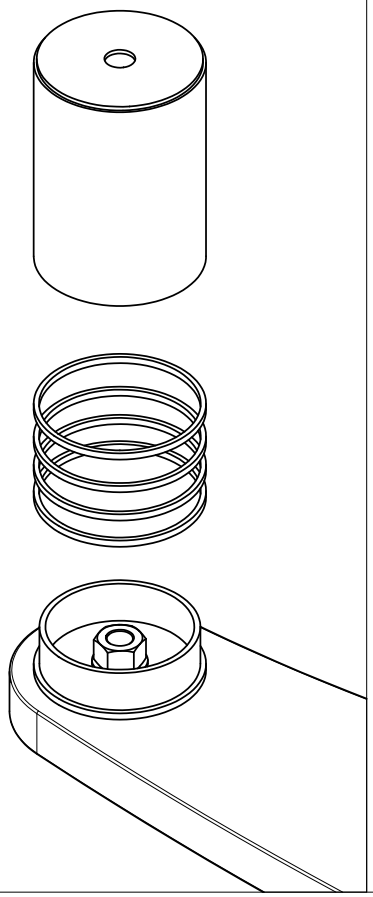

225 mm

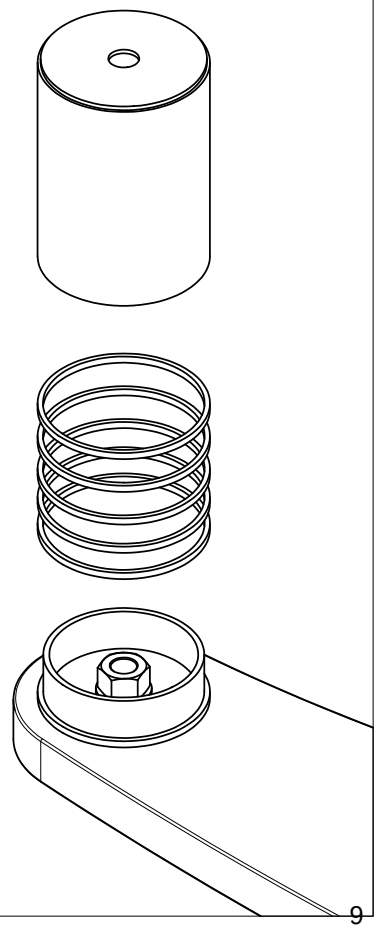

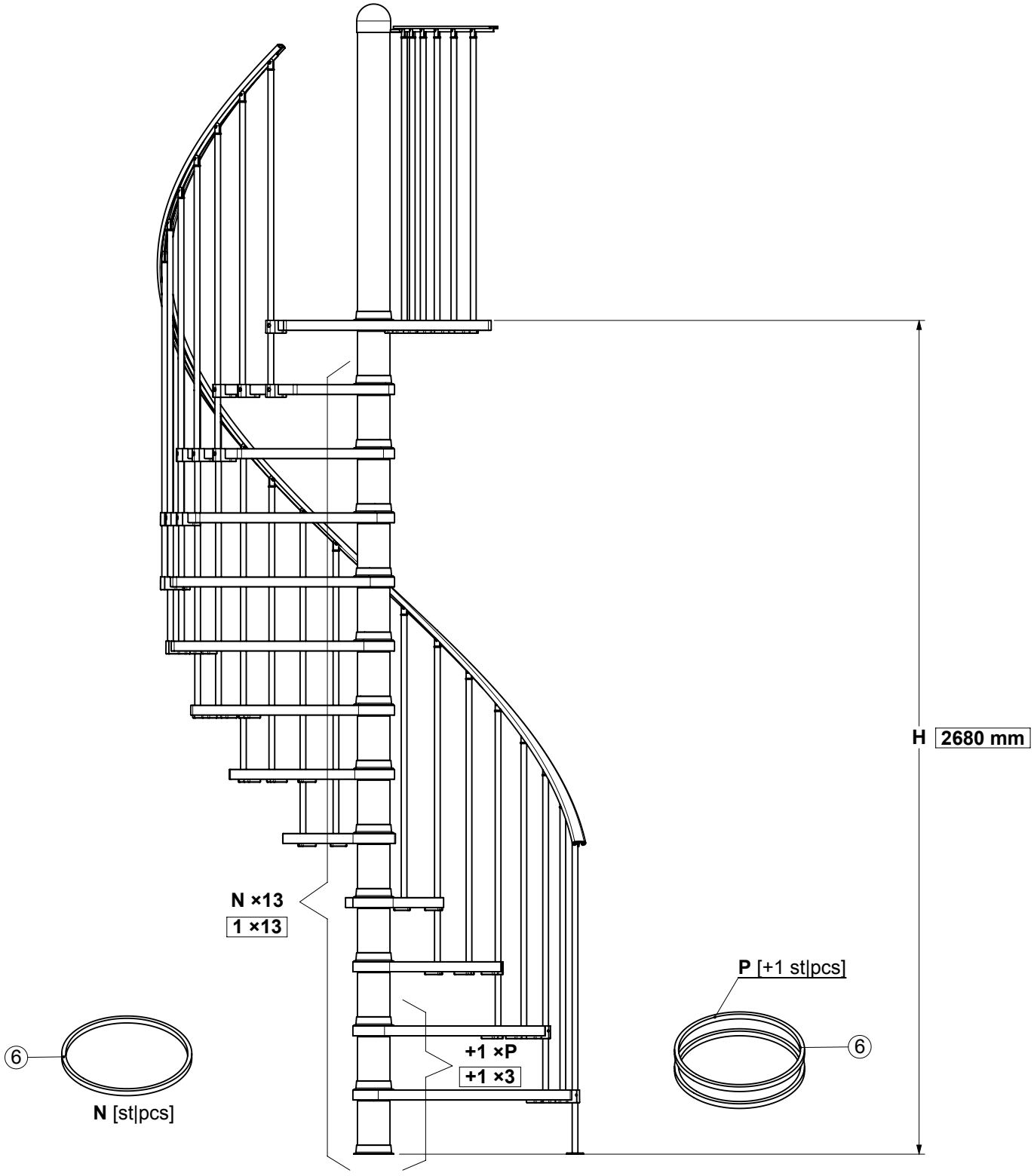

H [mm]	N	P	H [mm]	N	P	H [mm]	N	P	H [mm]	N	P	H [mm]	N	P
2600	0	0	2665	1	0	2730	2	0	2795	3	0	2860	4	0
2605	0	1	2670	1	1	2735	2	1	2800	3	1	2865	4	1
2610	0	2	2675	1	2	2740	2	2	2805	3	2	2870	4	2
2615	0	3	2680	1	3	2745	2	3	2810	3	3	2875	4	3
2620	0	4	2685	1	4	2750	2	4	2815	3	4	2880	4	4
2625	0	5	2690	1	5	2755	2	5	2820	3	5	2885	4	5
2630	0	6	2695	1	6	2760	2	6	2825	3	6	2890	4	6
2635	0	7	2700	1	7	2765	2	7	2830	3	7	2895	4	7
2640	0	8	2705	1	8	2770	2	8	2835	3	8	2900	4	8
2645	0	9	2710	1	9	2775	2	9	2840	3	9	2905	4	9
2650	0	10	2715	1	10	2780	2	10	2845	3	10	2910	4	10
2655	0	11	2720	1	11	2785	2	11	2850	3	11	2915	4	11
2660	0	12	2725	1	12	2790	2	12	2855	3	12	2920	4	12
												2925	5	0

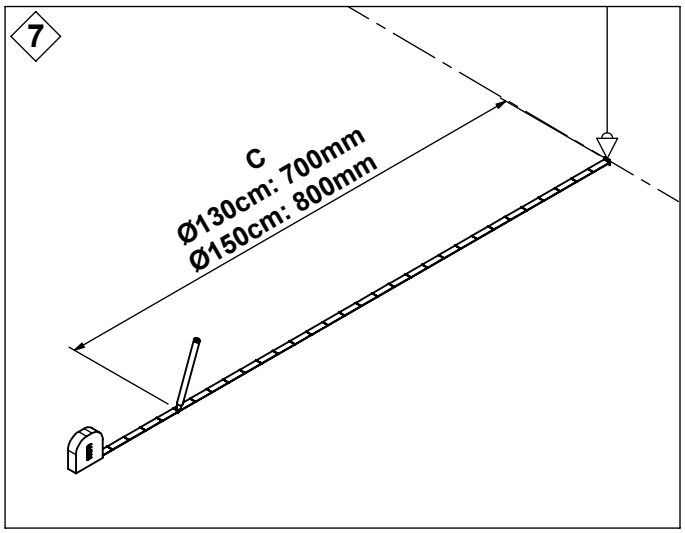
7
C
Ø130cm: 700mm
Ø150cm: 800mm

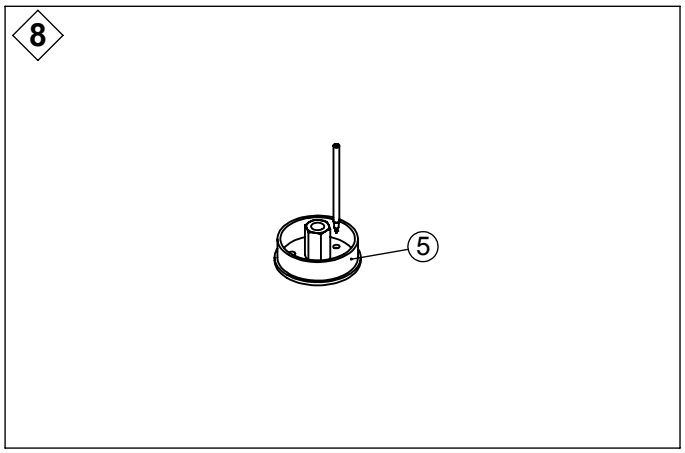
8
5

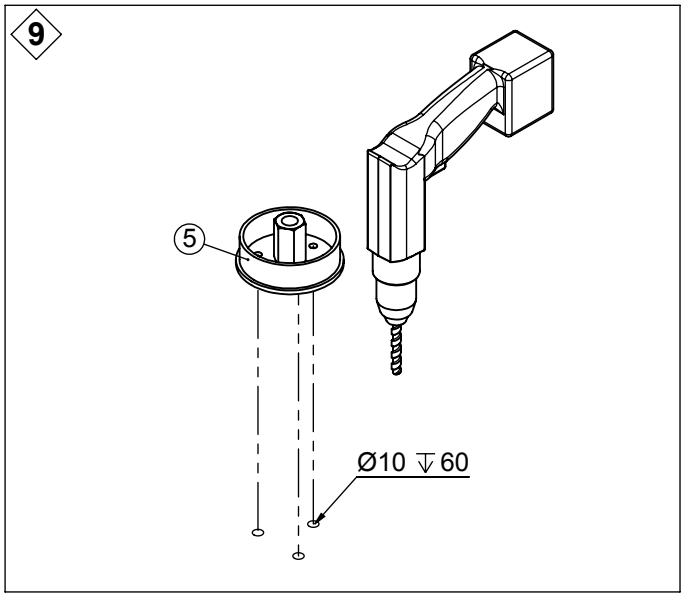
9
5
Ø10 ⇩60

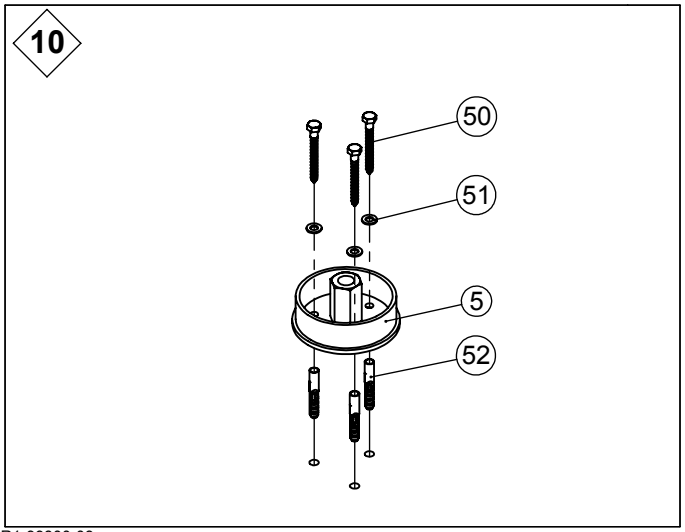
10
50
51
5
52

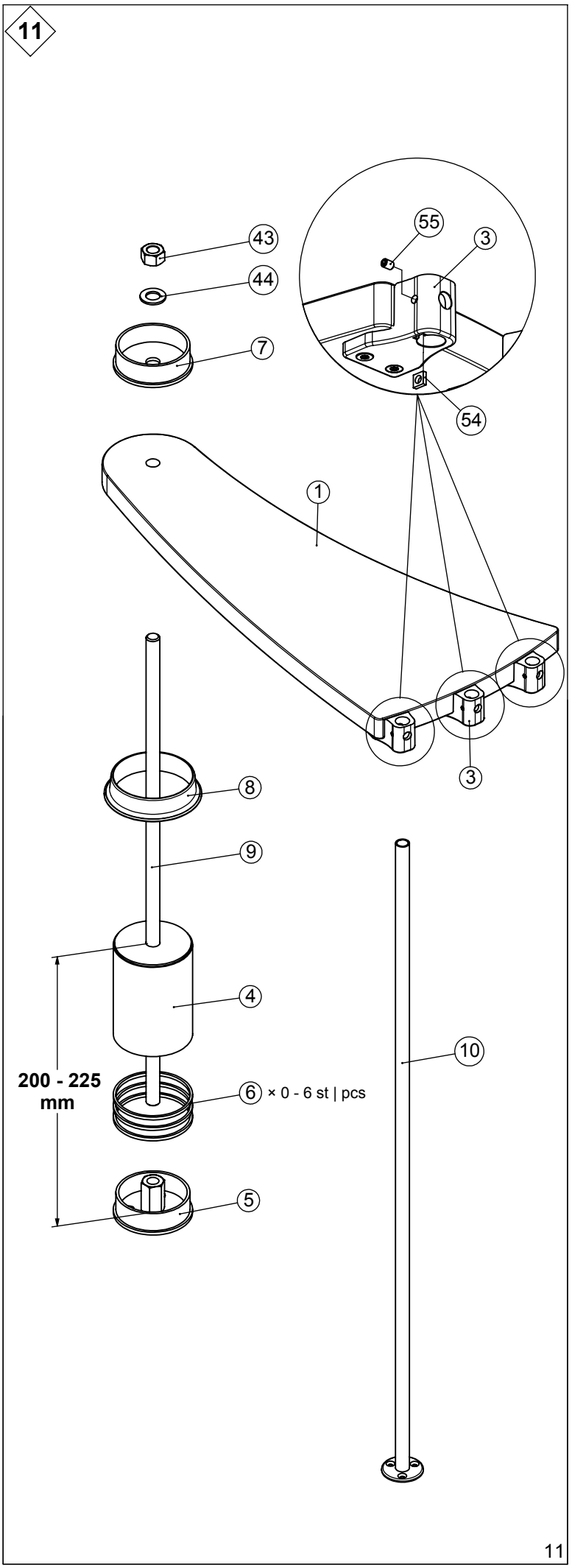
11
43
44
7
55
3
54
1
3
8
9
4
200 - 225 mm
6
× 0 - 6 st | pcs
5
10

R1-99800-03

12

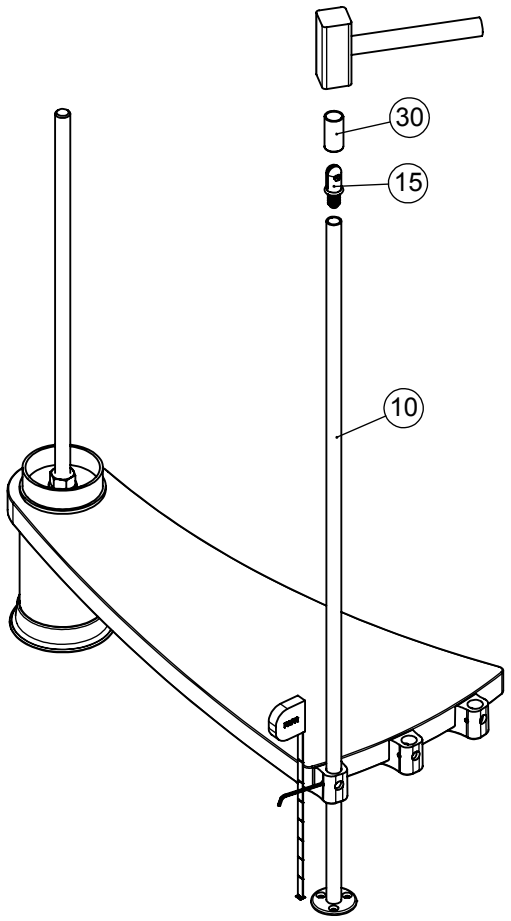

13

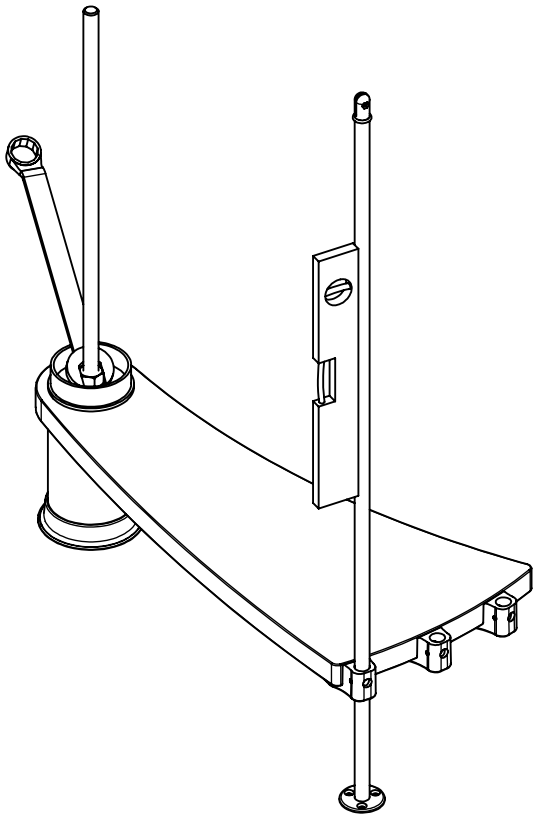

14

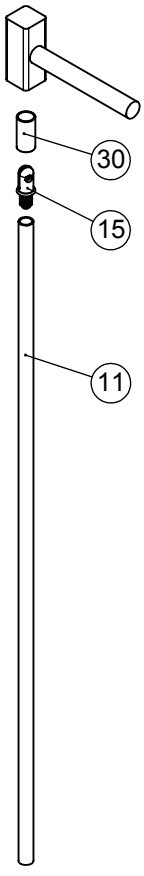

15

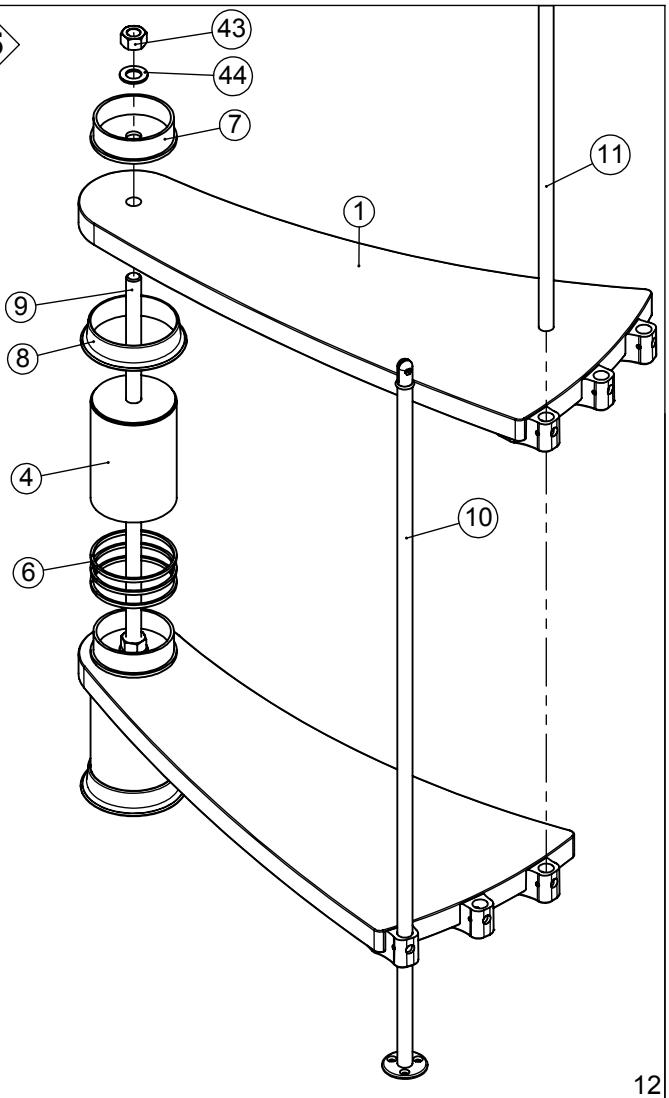

R1-99800-03

16

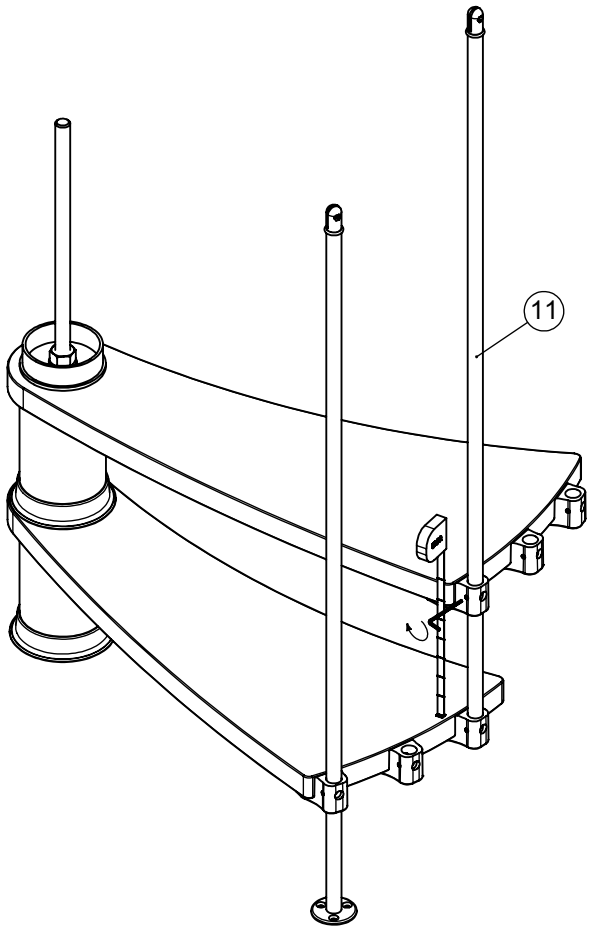

17

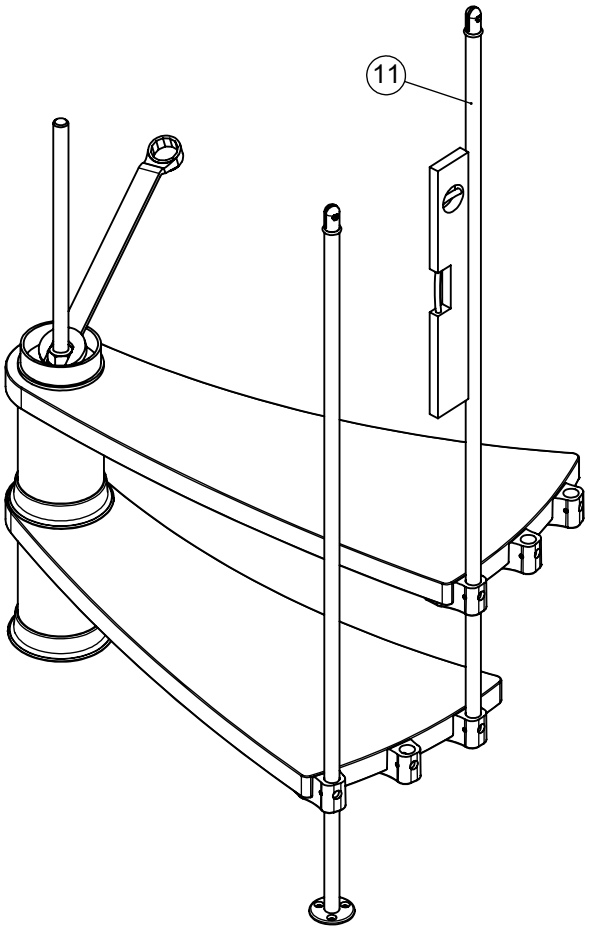

18

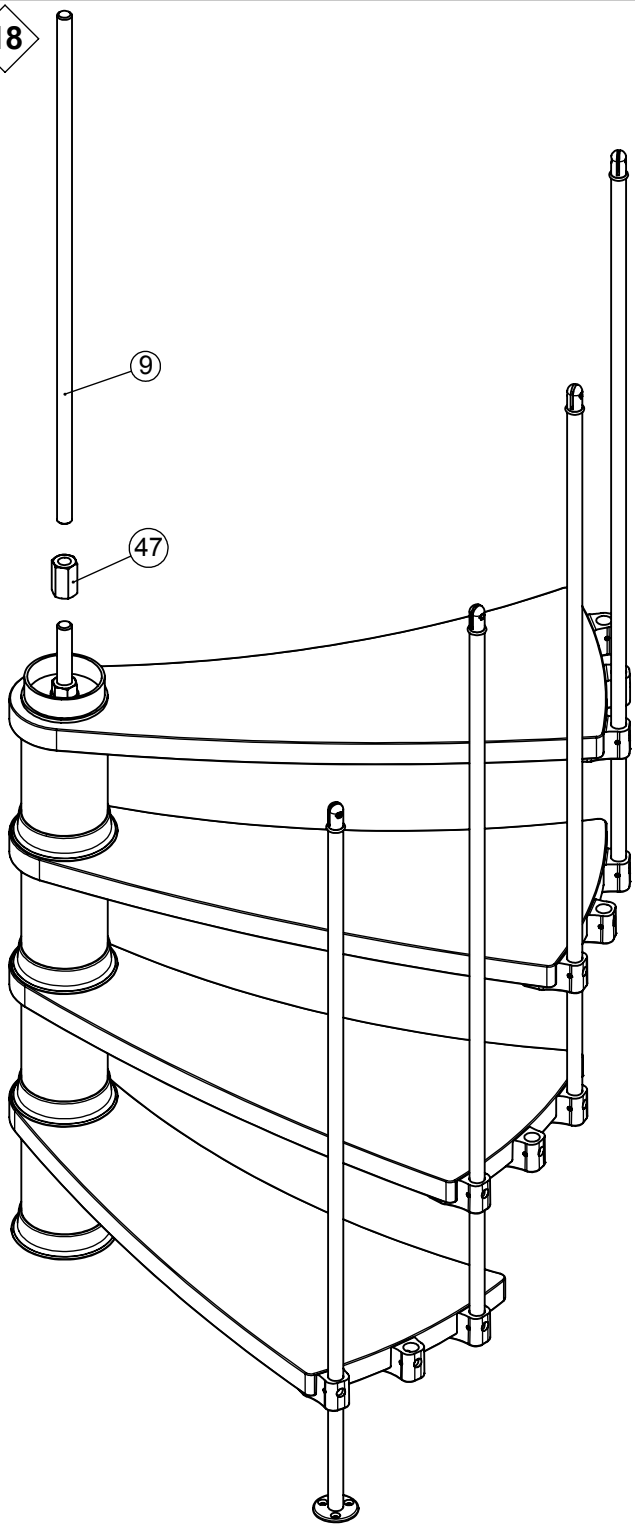

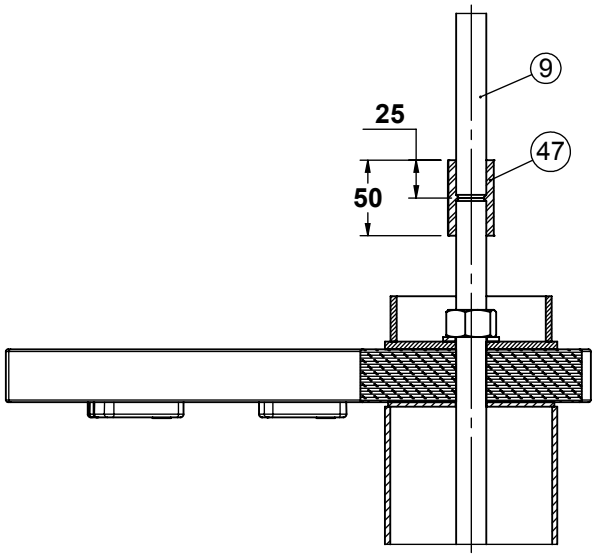

R1-99800-03

19a

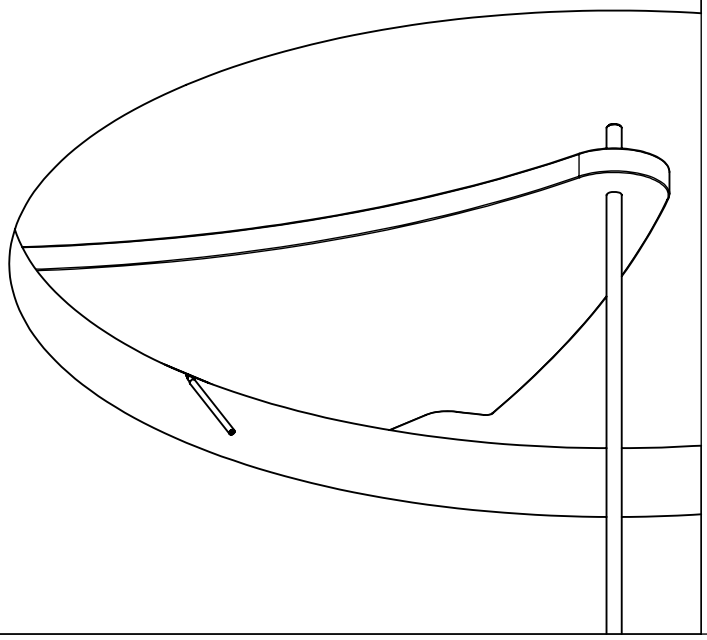

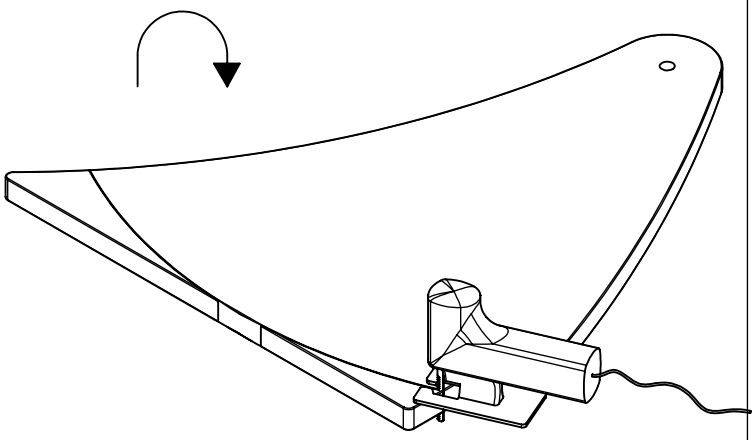

19b

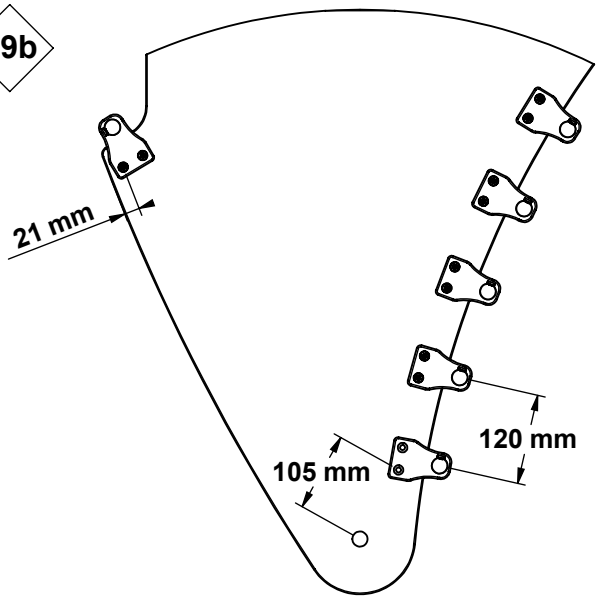

Ø130cm

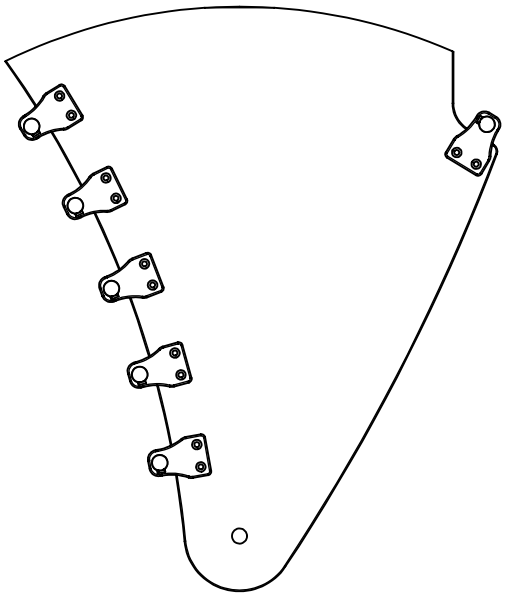

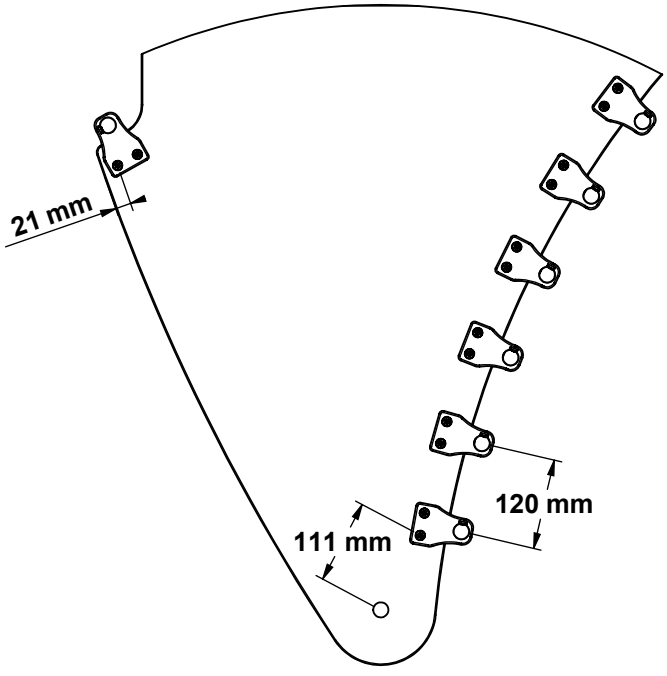

Ø150cm

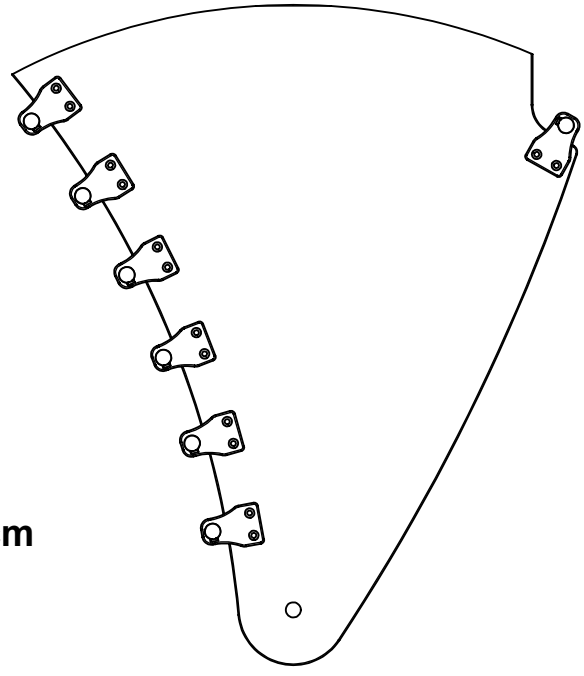

20a

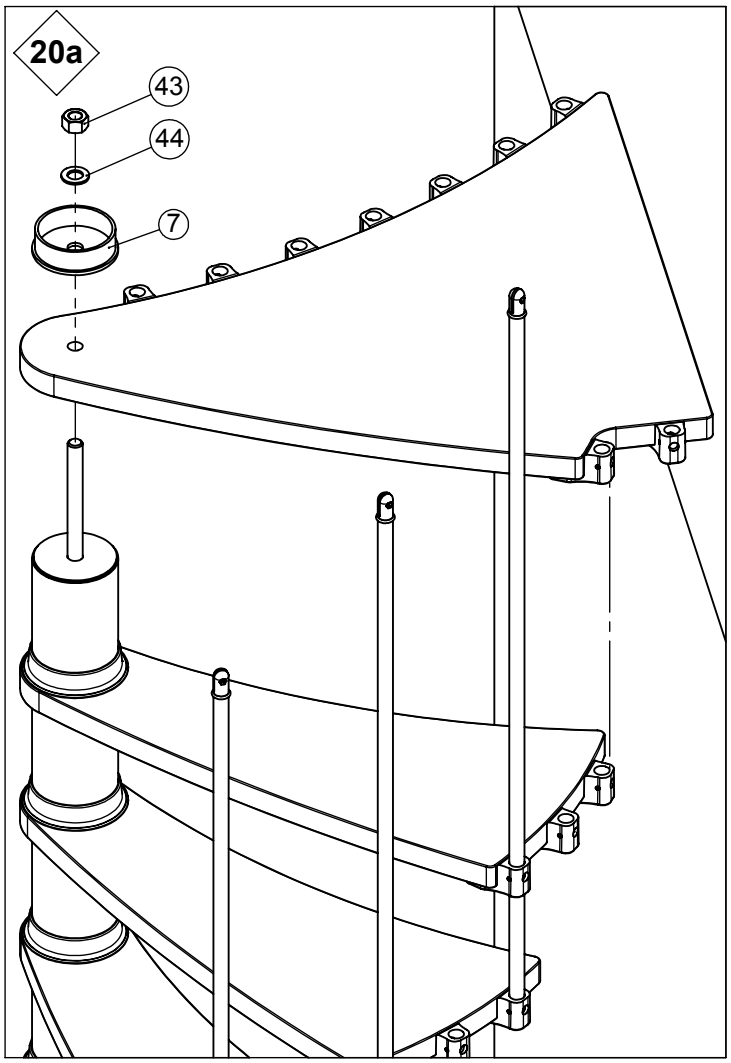

20b

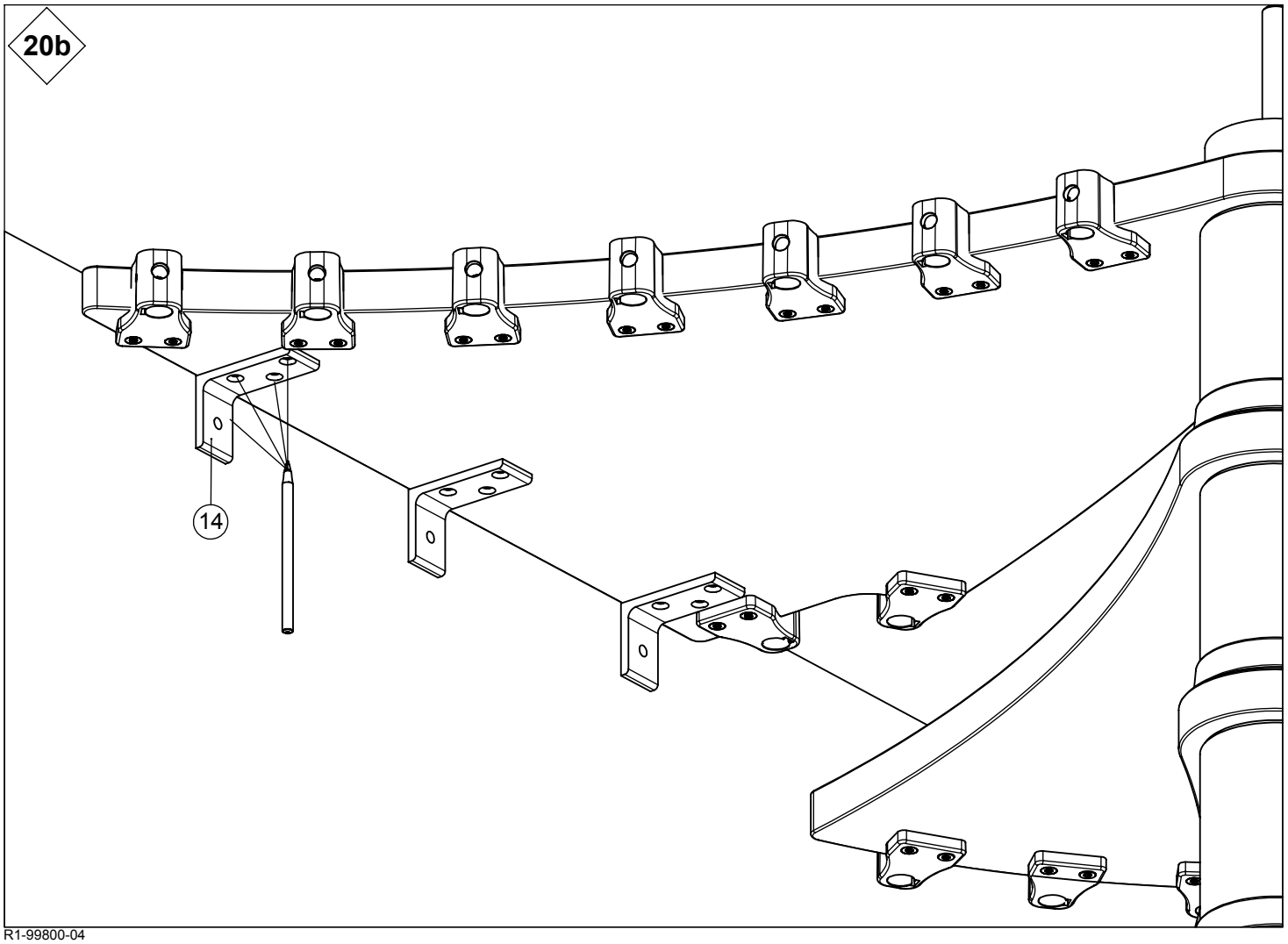

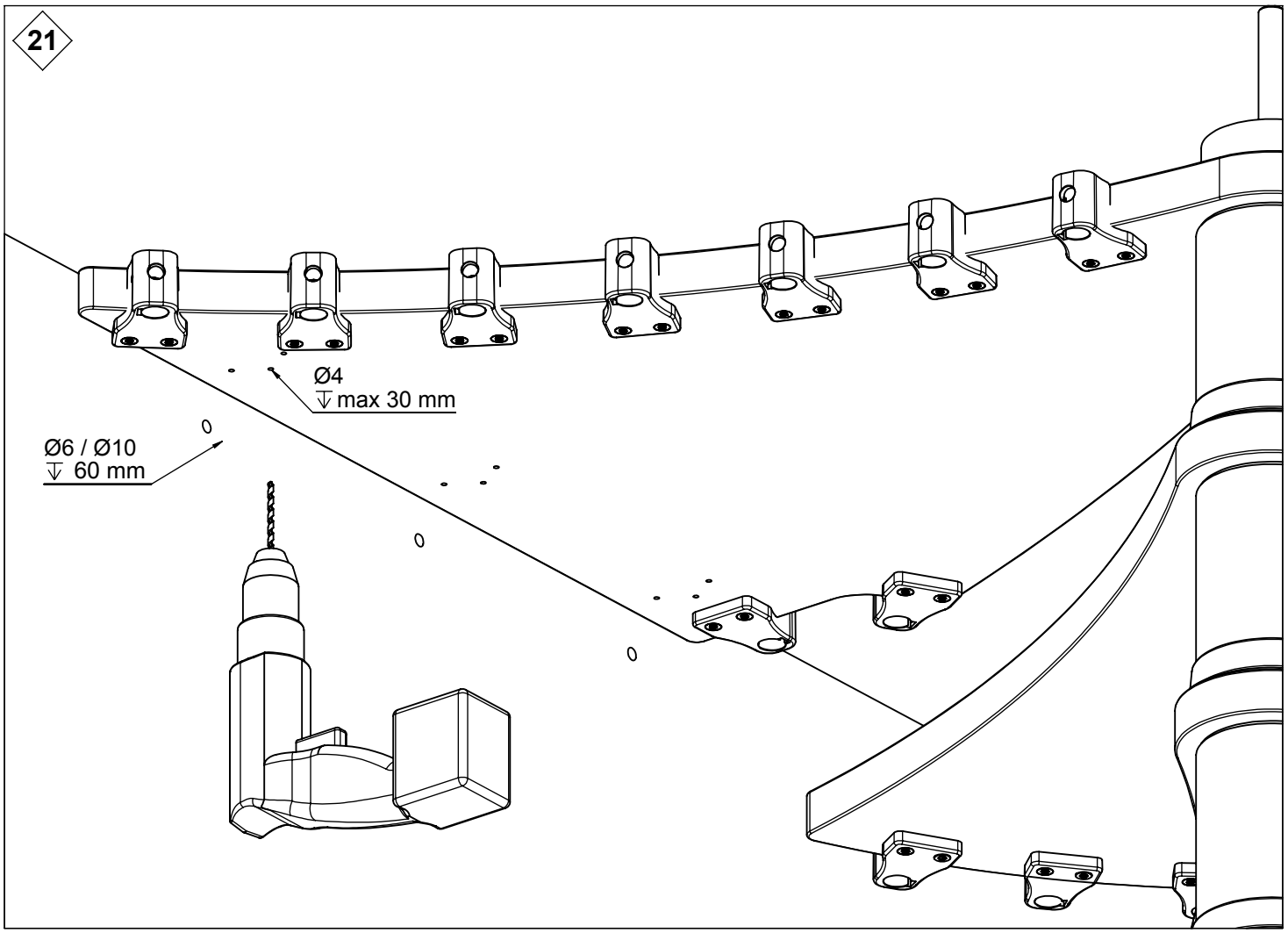
21
Ø4
max 30 mm
Ø6 / Ø10
60 mm

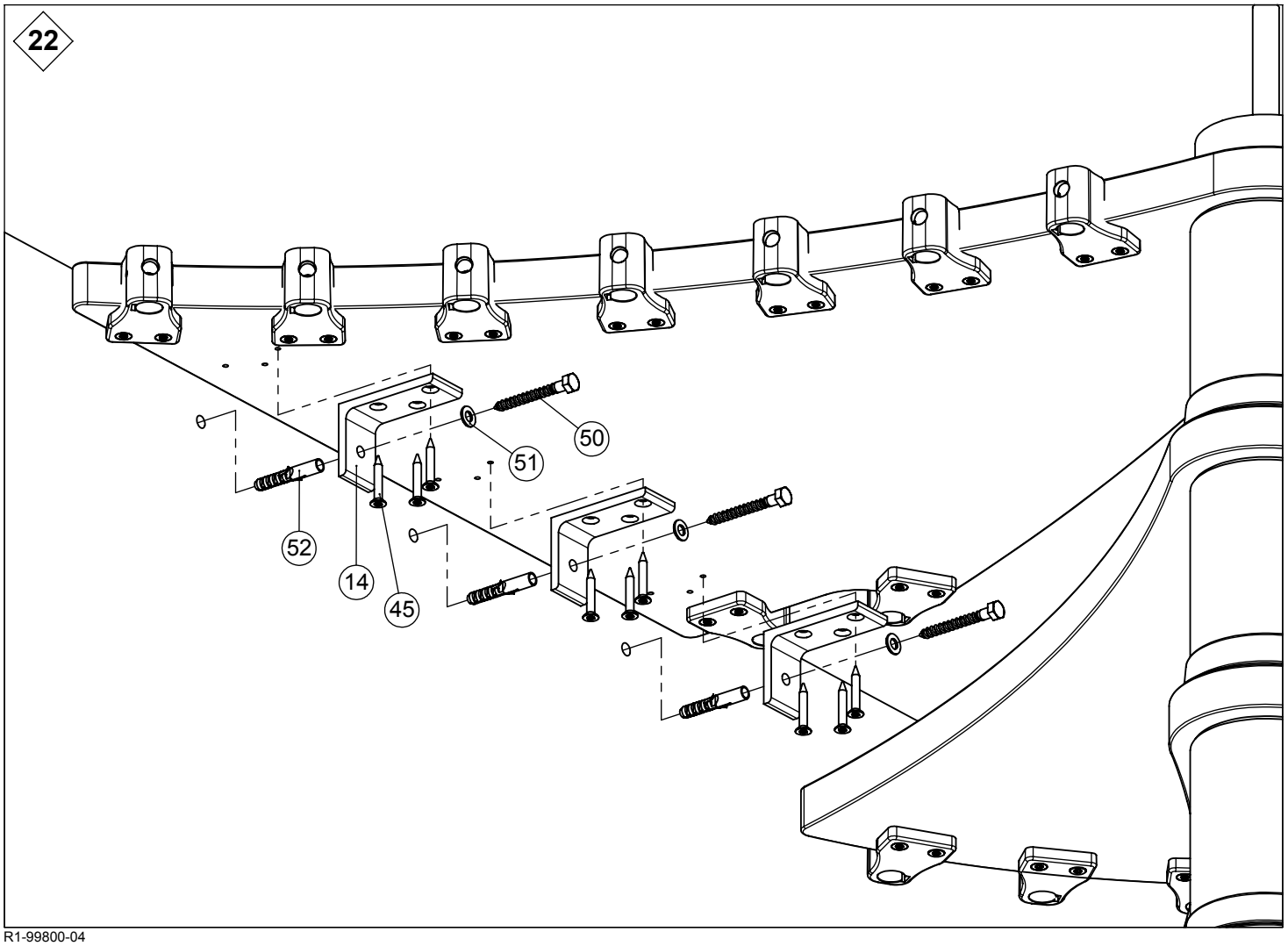
22
50
51
52
14
45

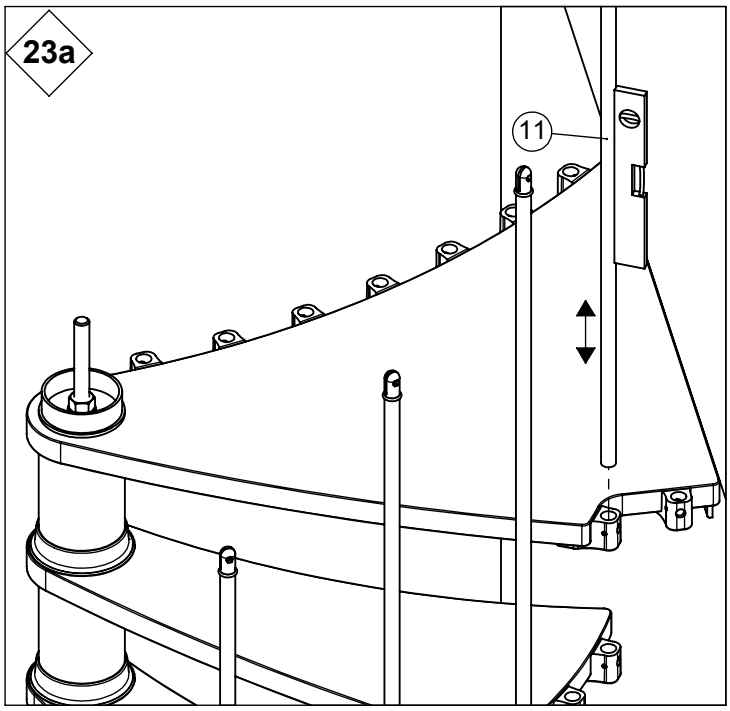
23a
11

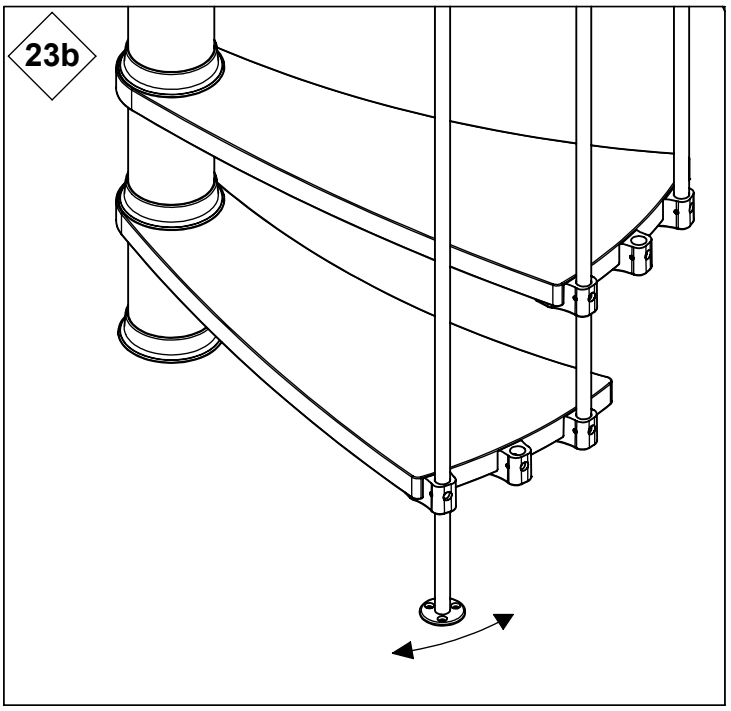
23b

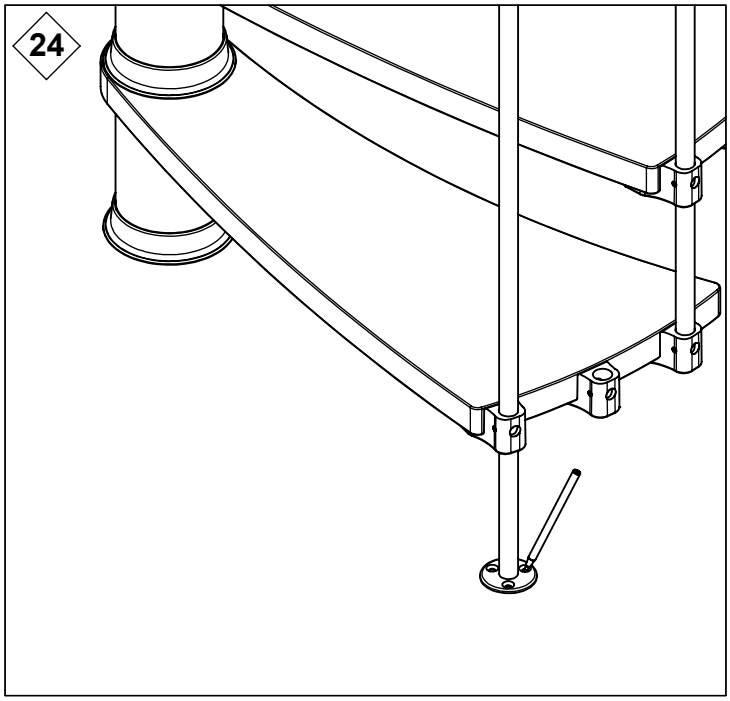
24

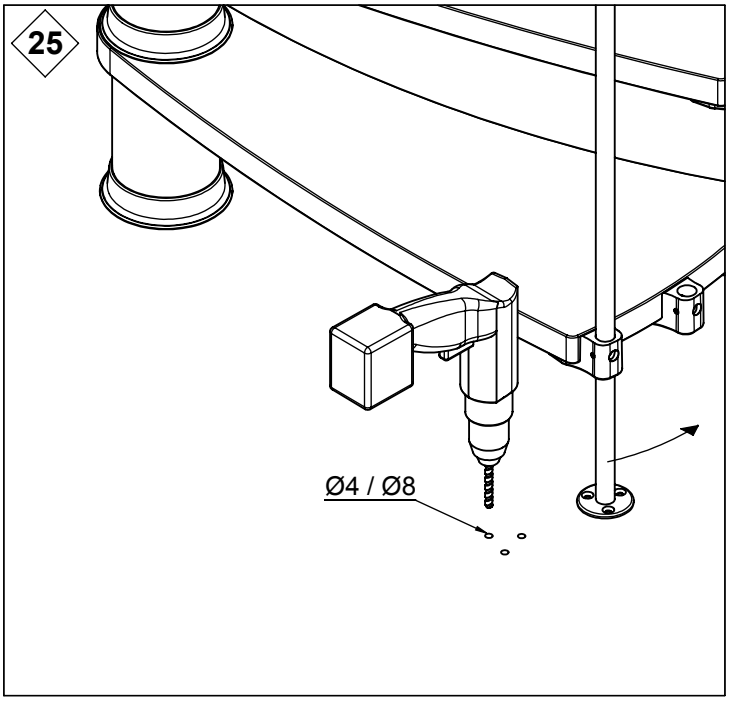
25
Ø4 / Ø8

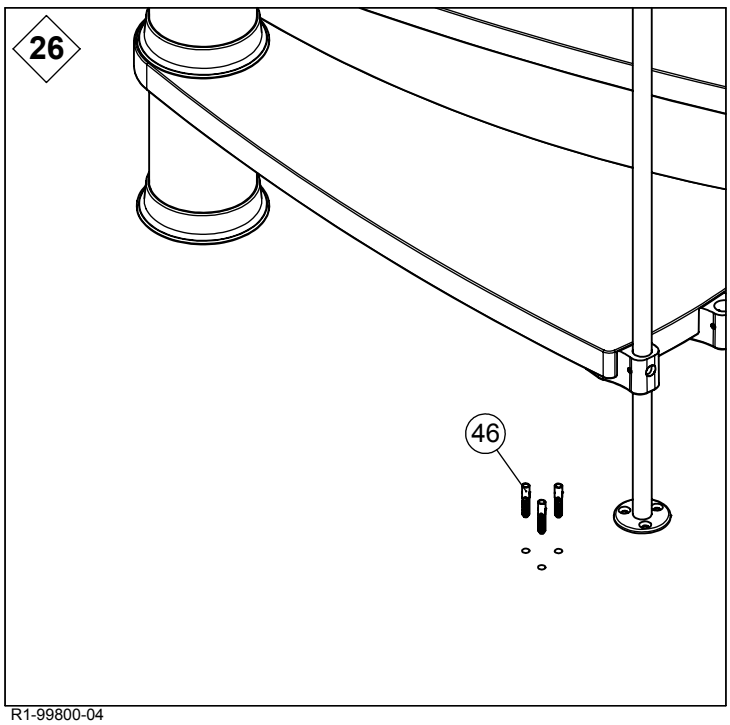
26
46

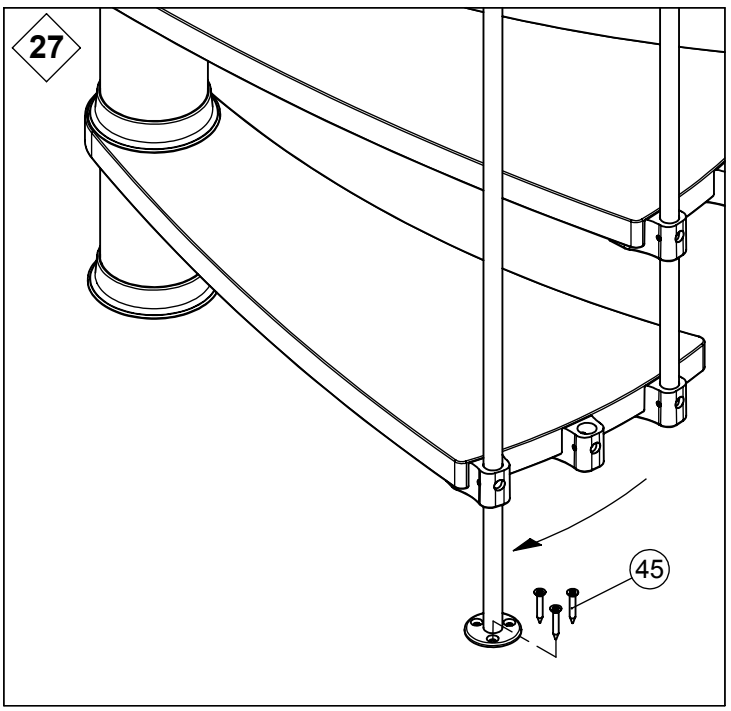
27
45

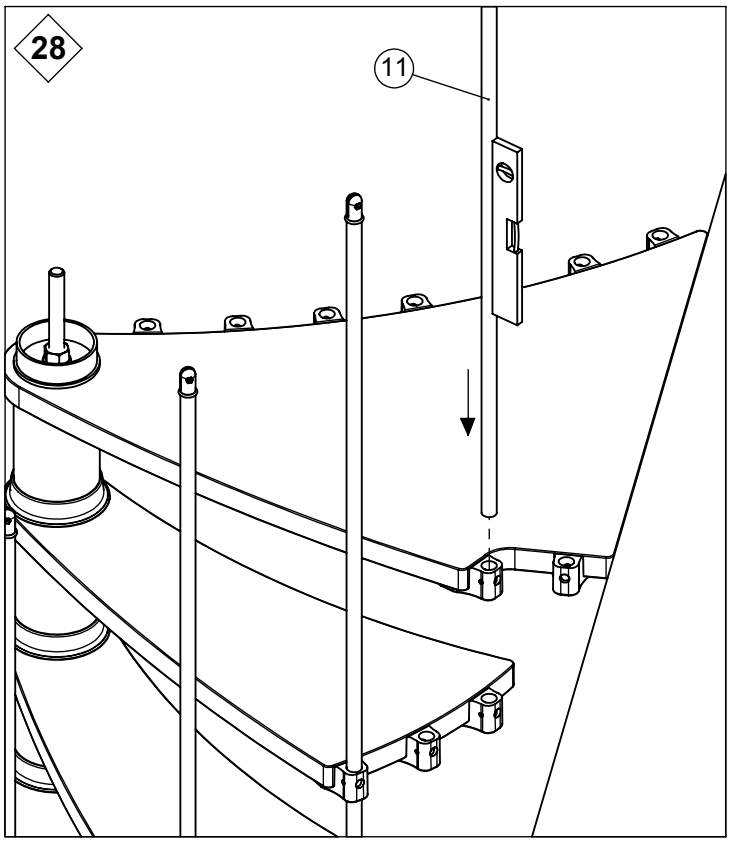
28
11

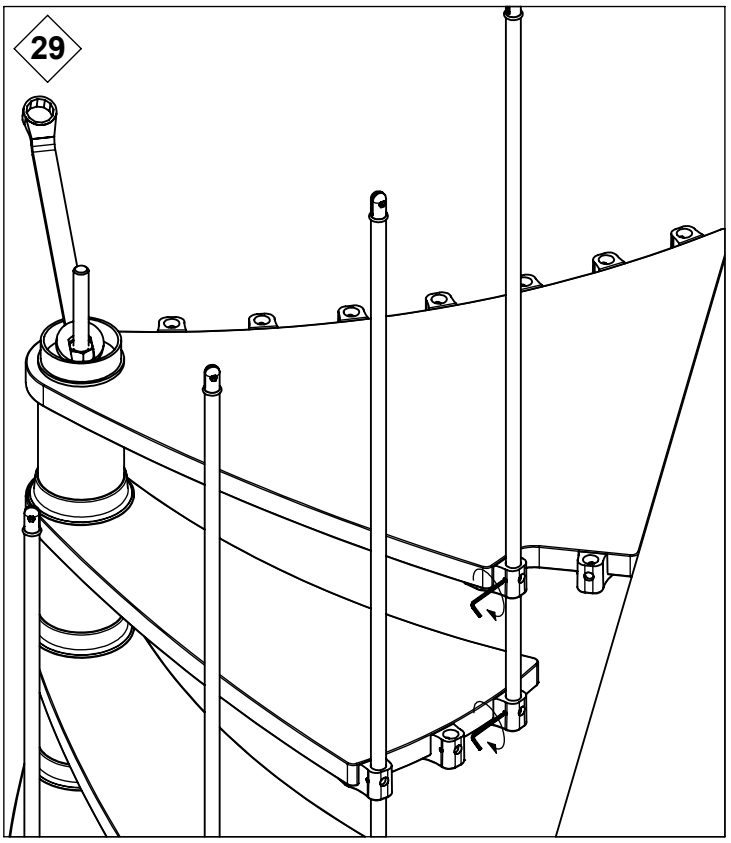
29

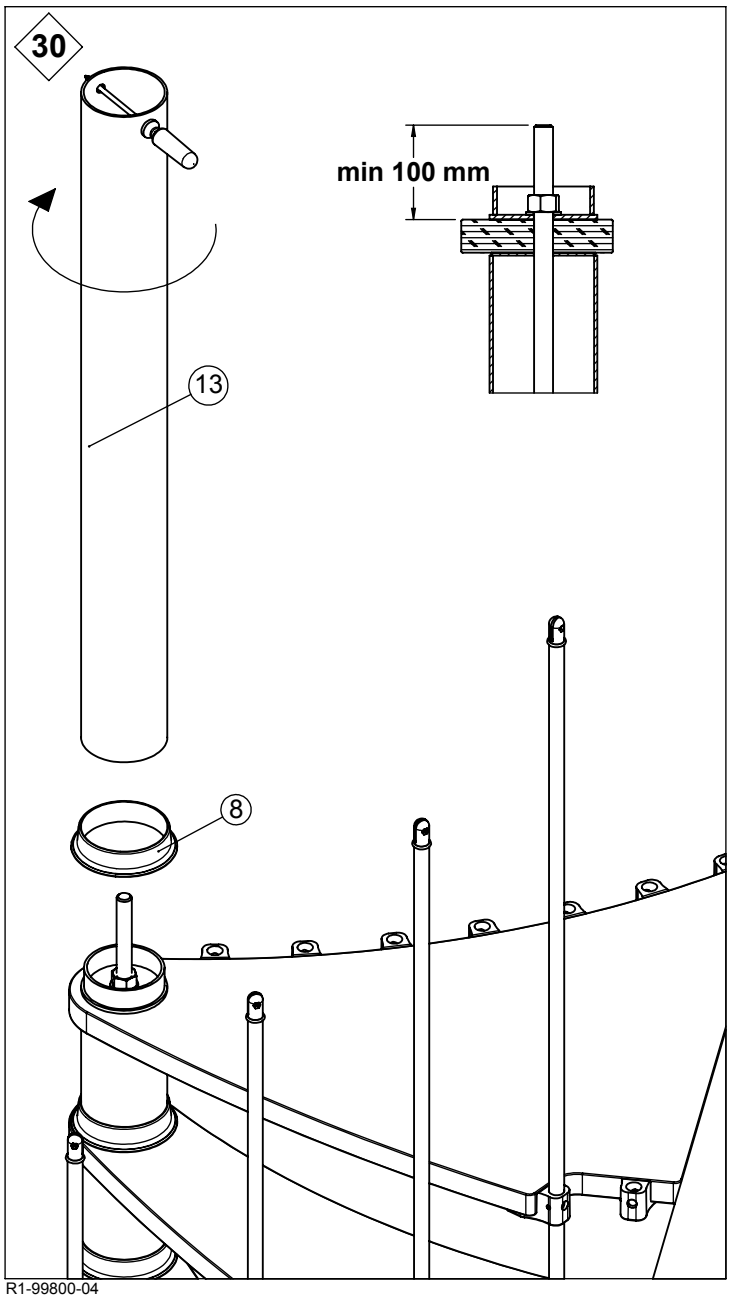
30
min 100 mm
13
8

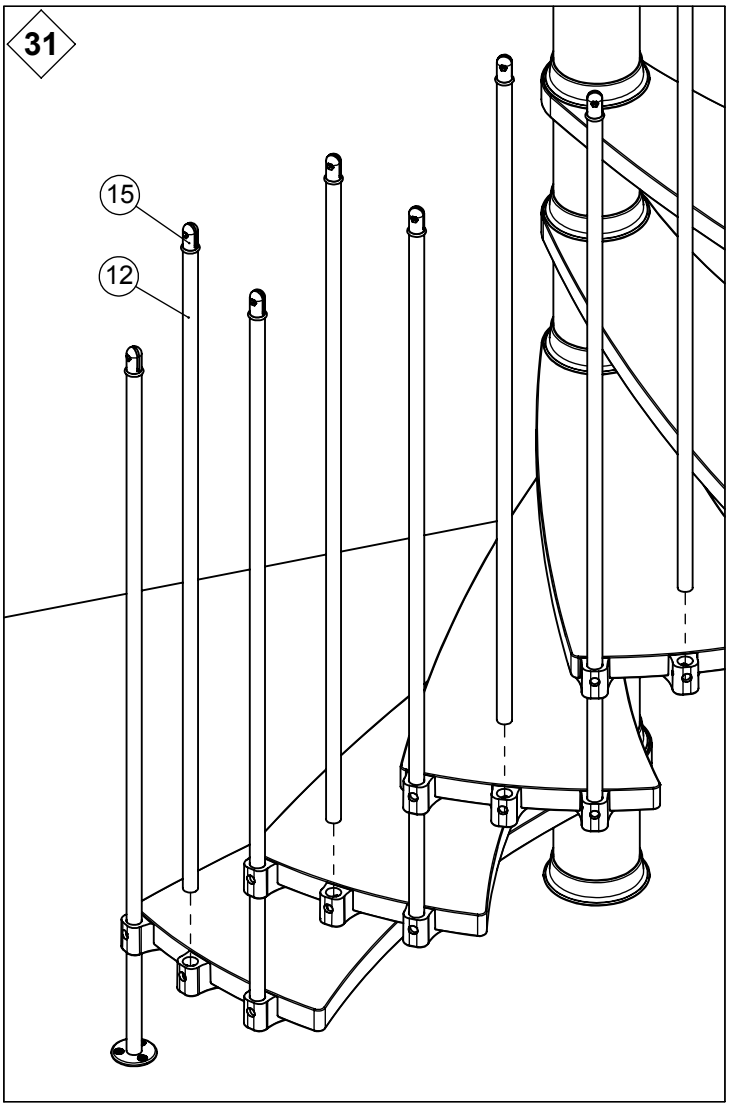
31
15
12

32

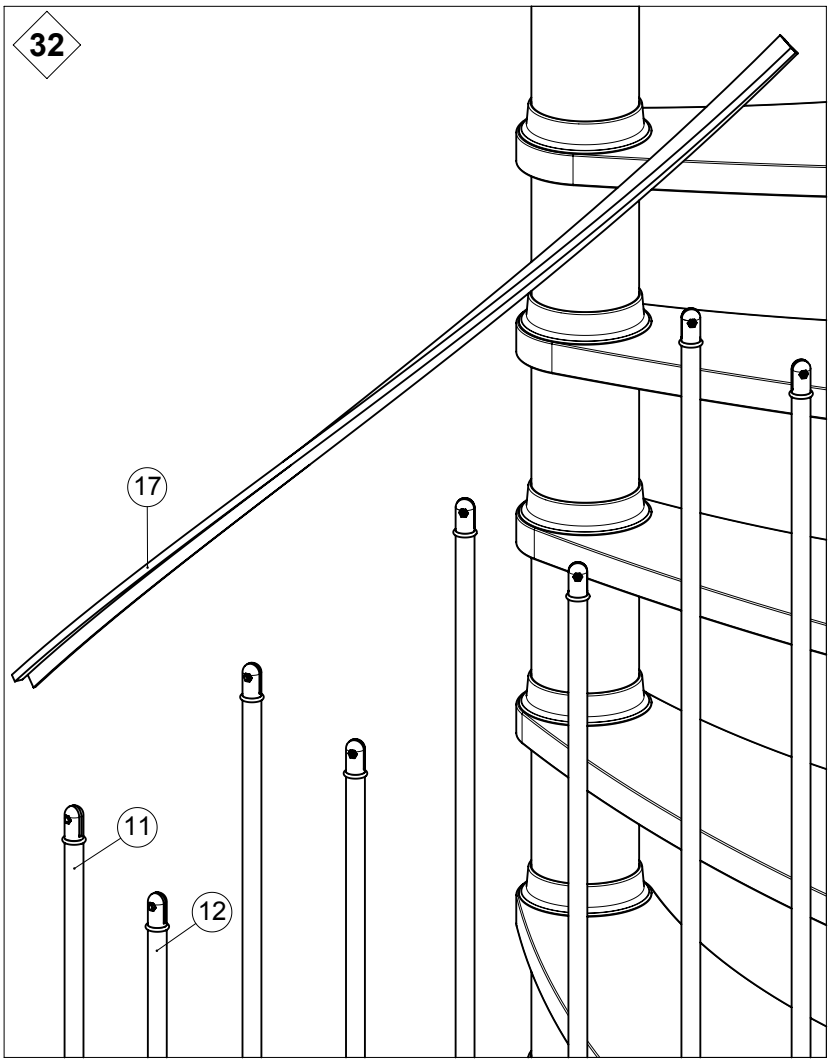

33

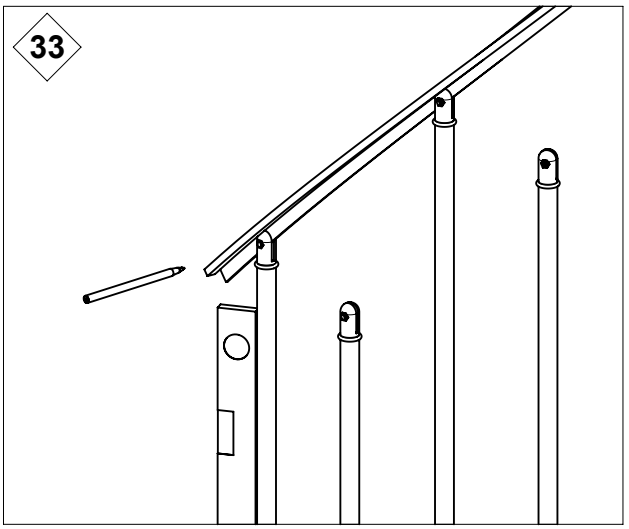

34

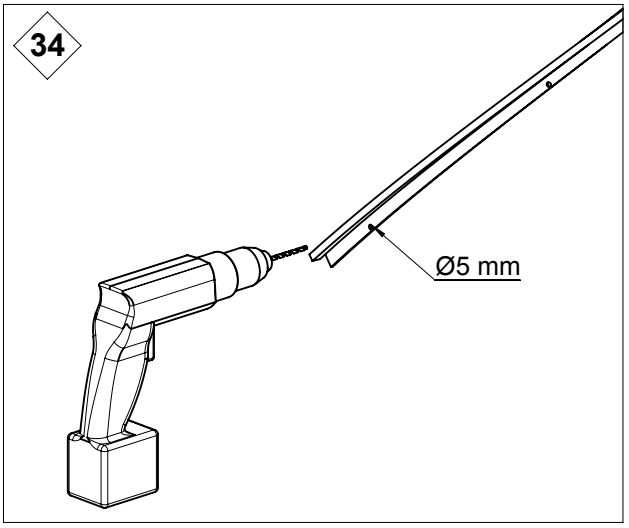

35

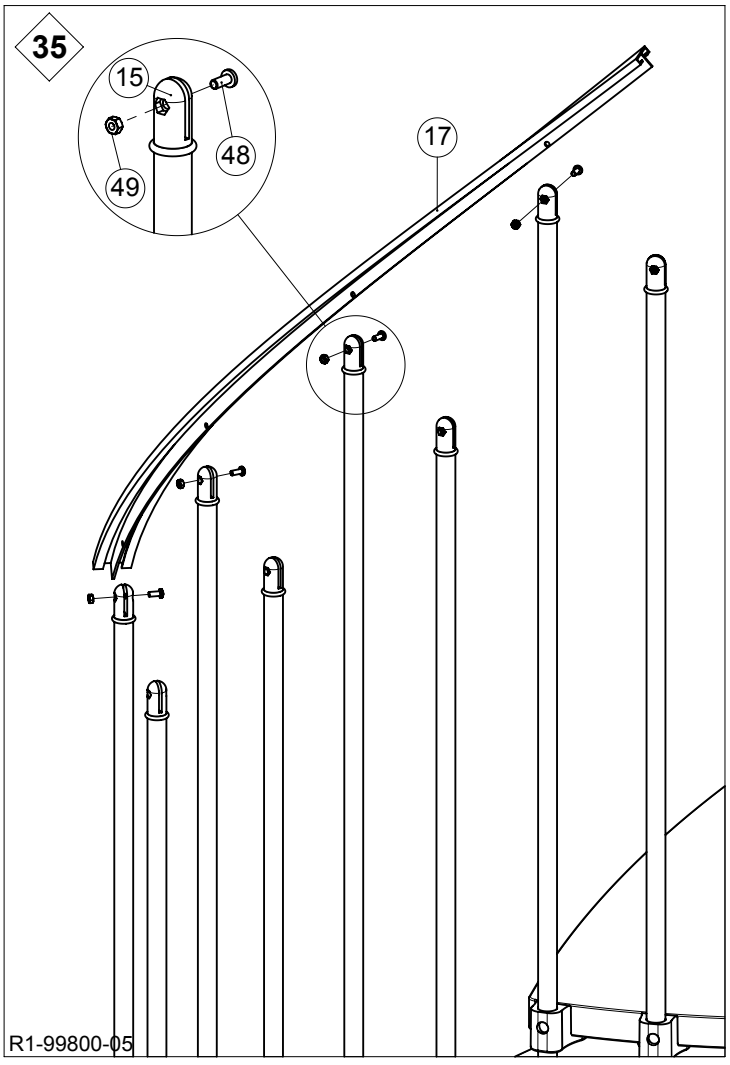

36

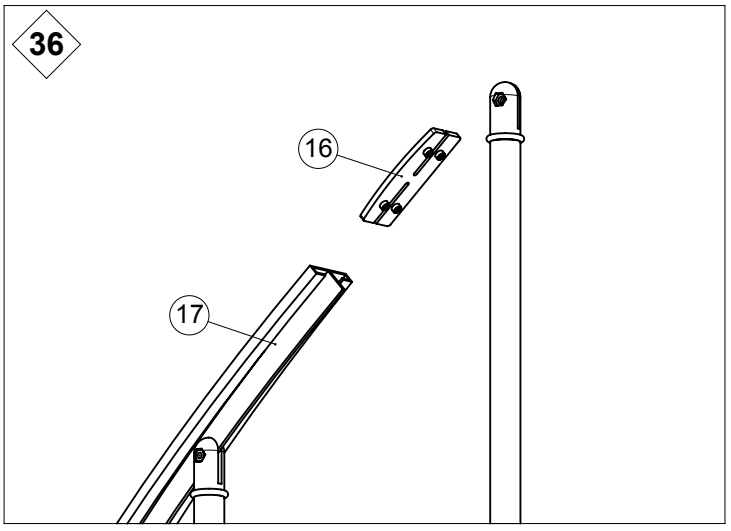

37

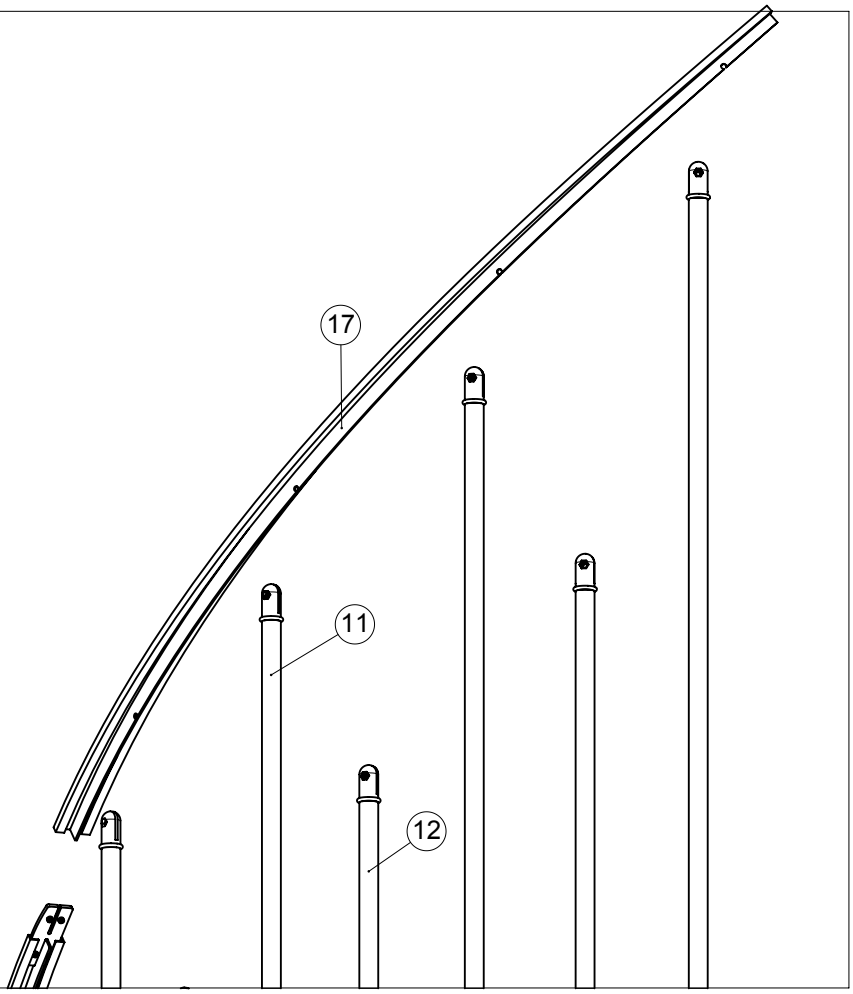

38

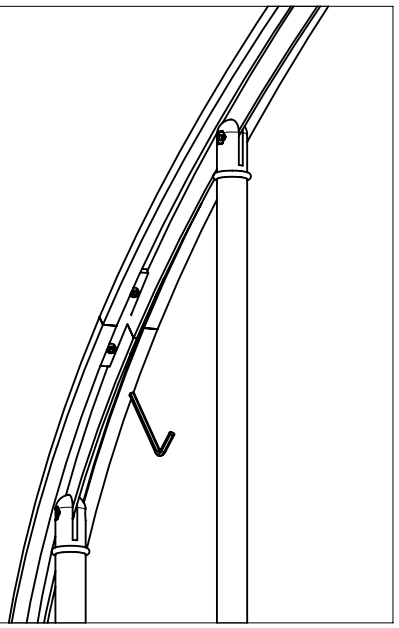

39

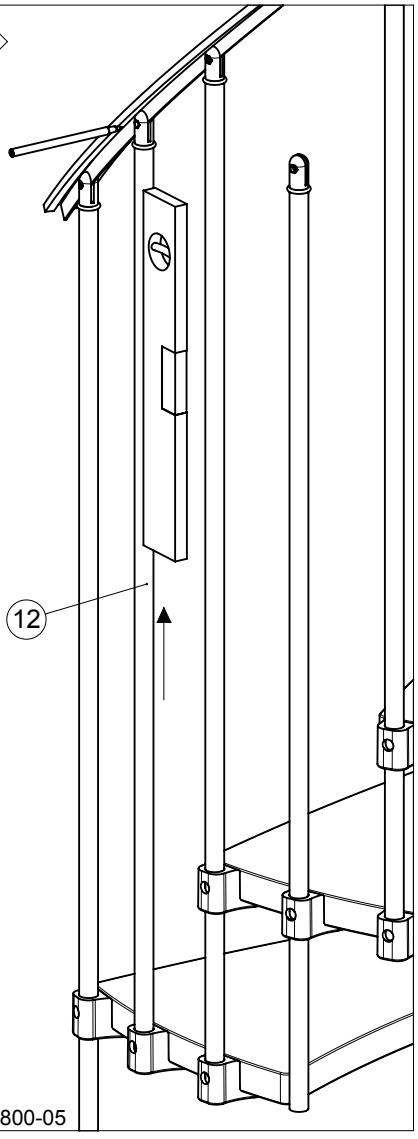

40

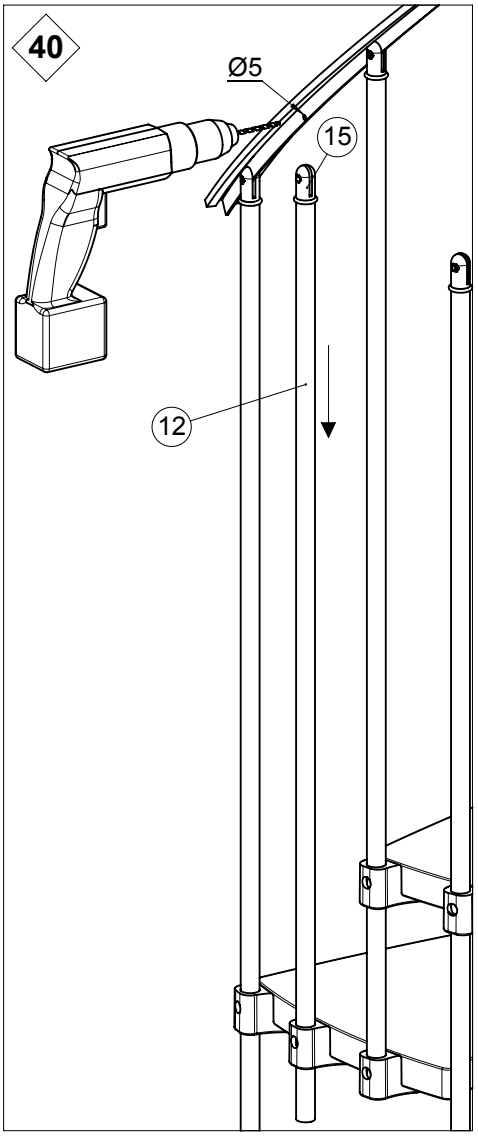

41

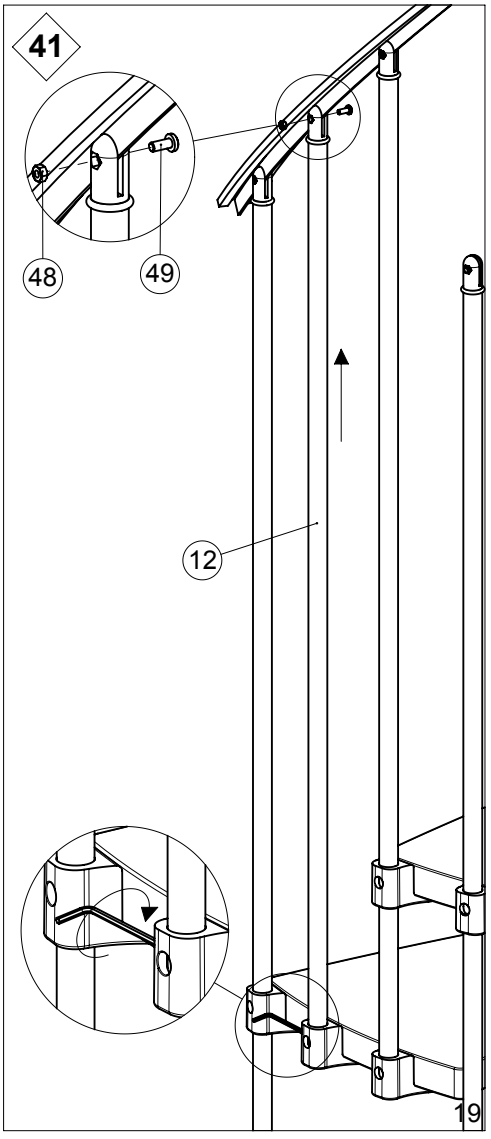

R1-99800-05

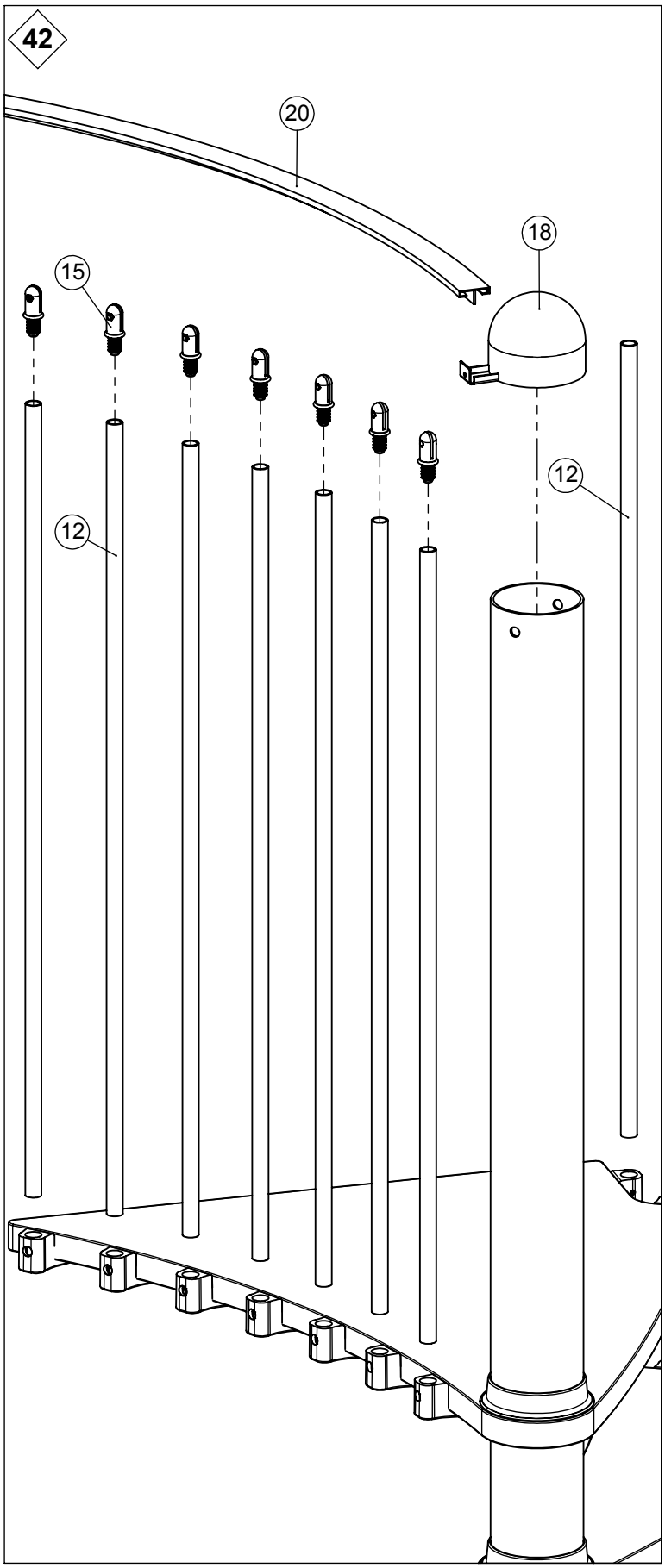
42
20
18
15
12
12

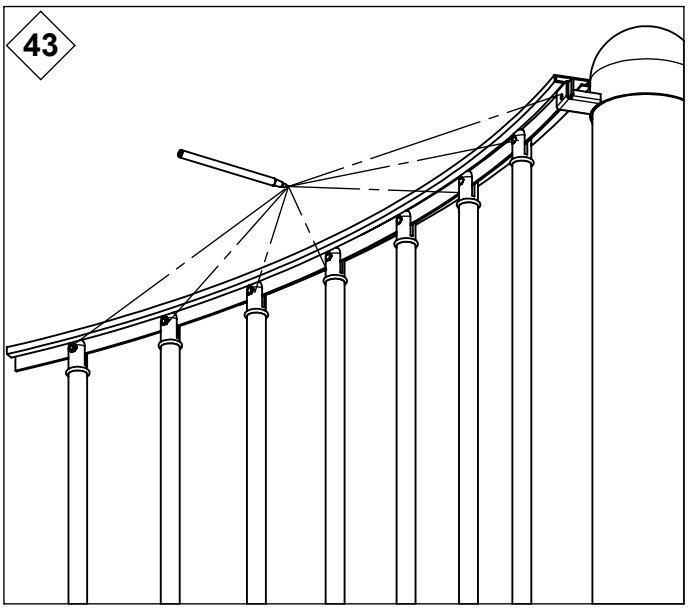
43

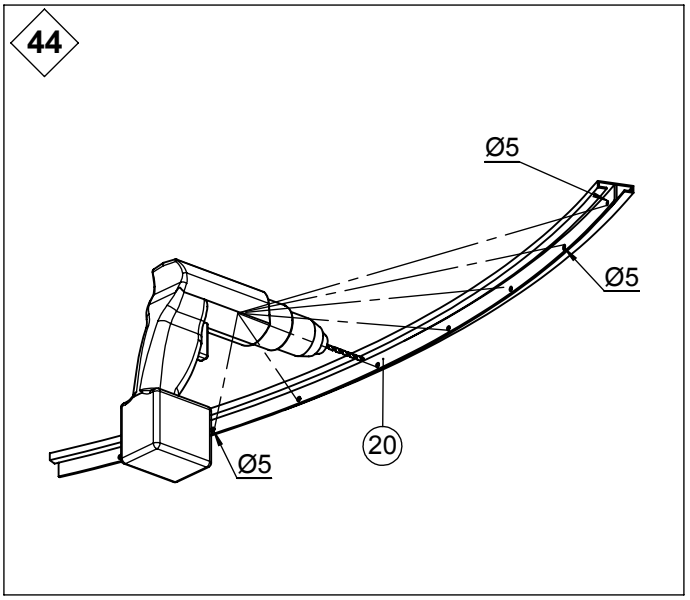
44
Ø5
Ø5
20
Ø5

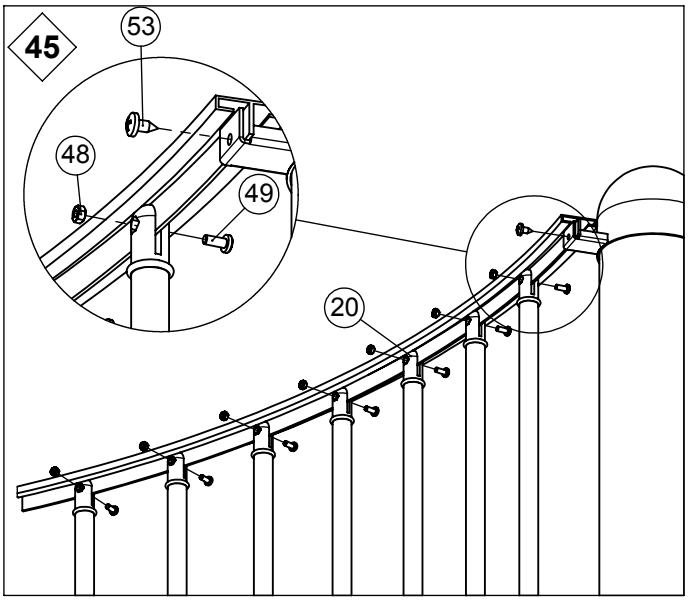
45
53
48
49
20

46-48

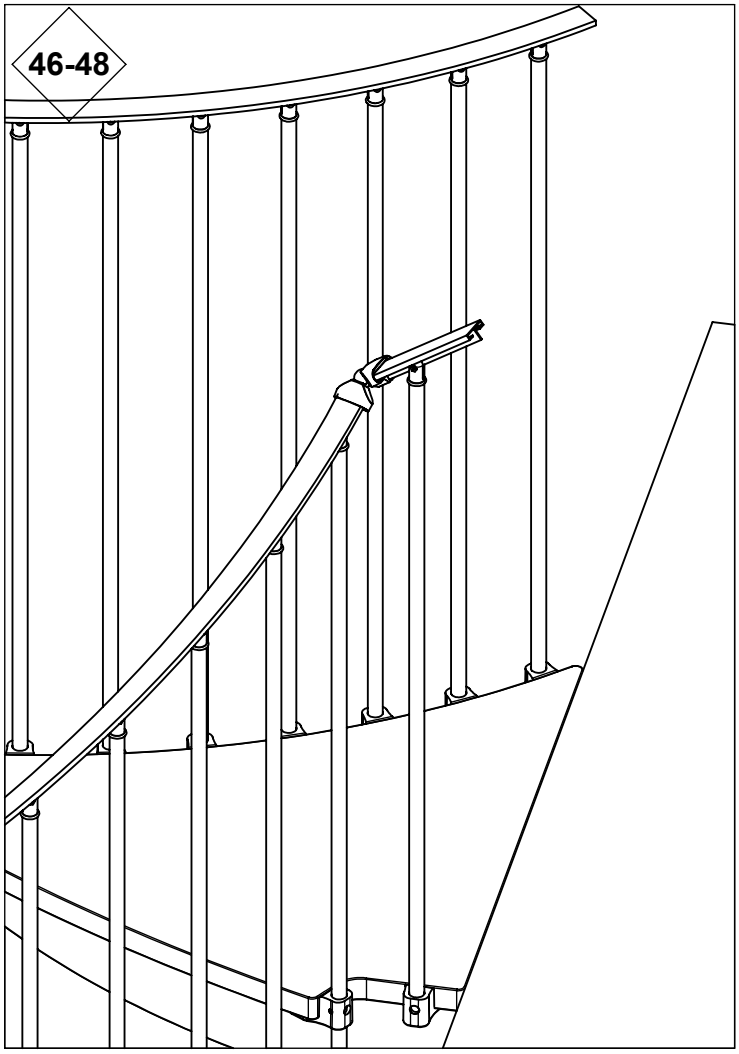

46

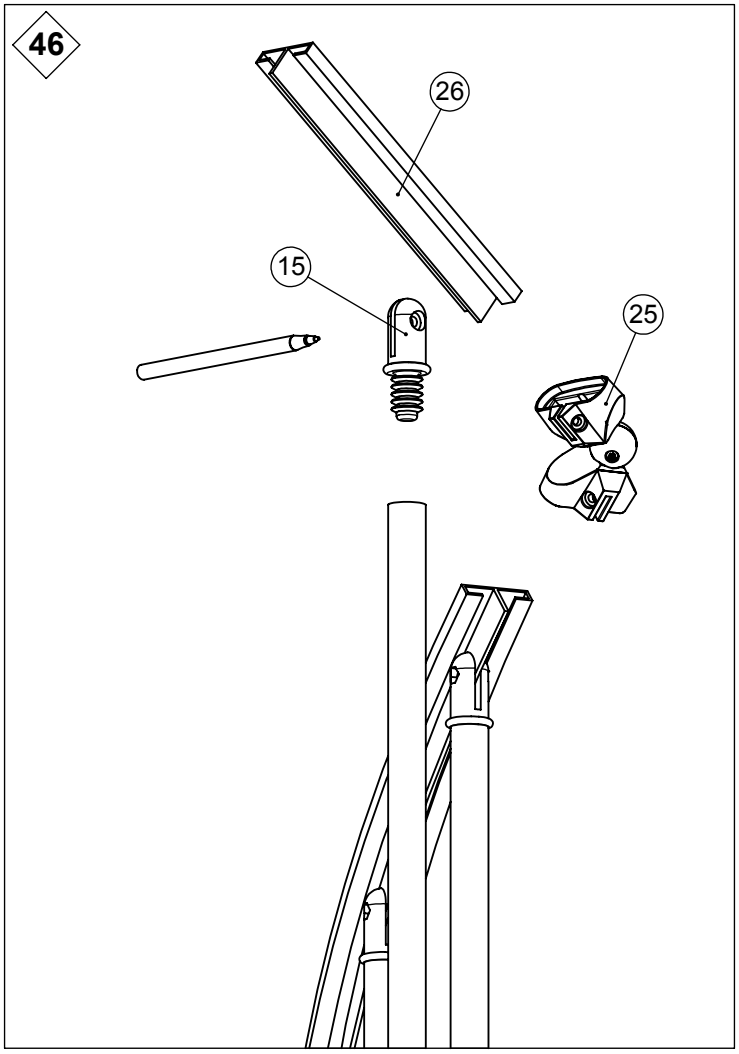

47

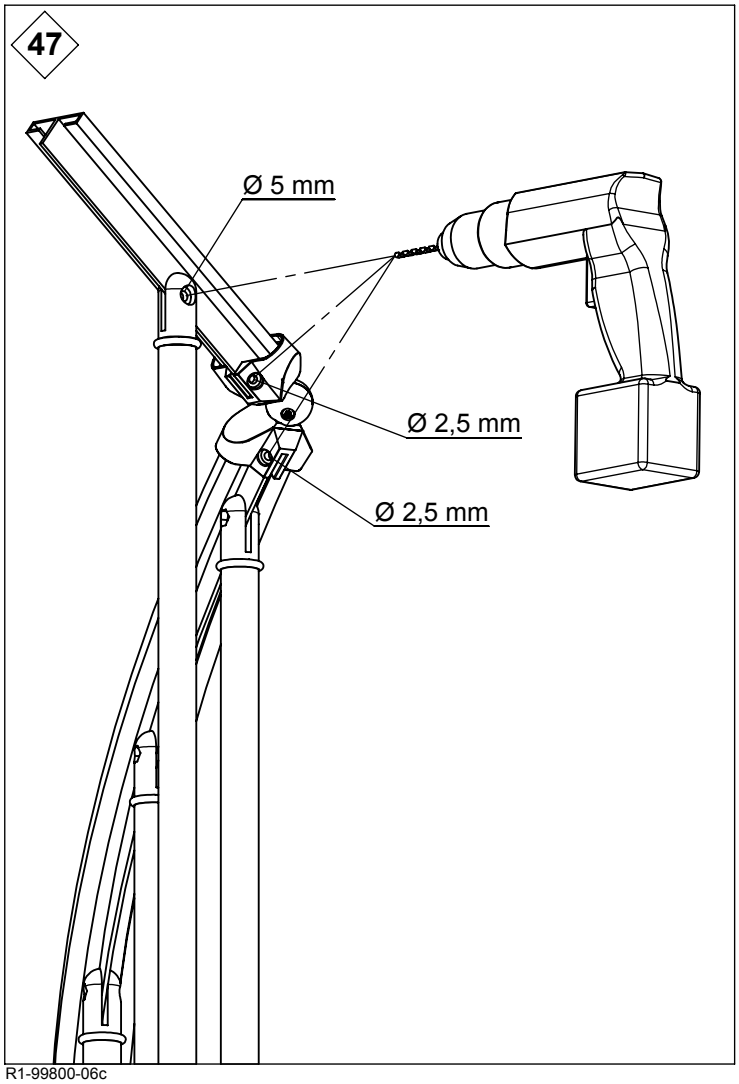

48

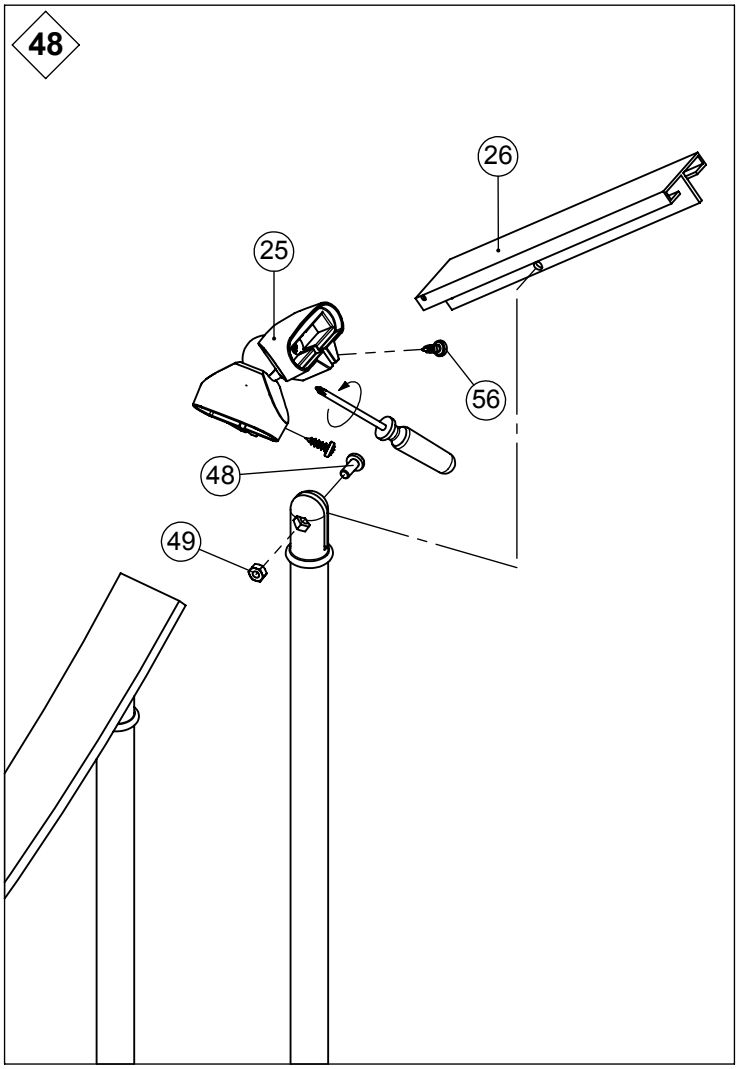

R1-99800-06c

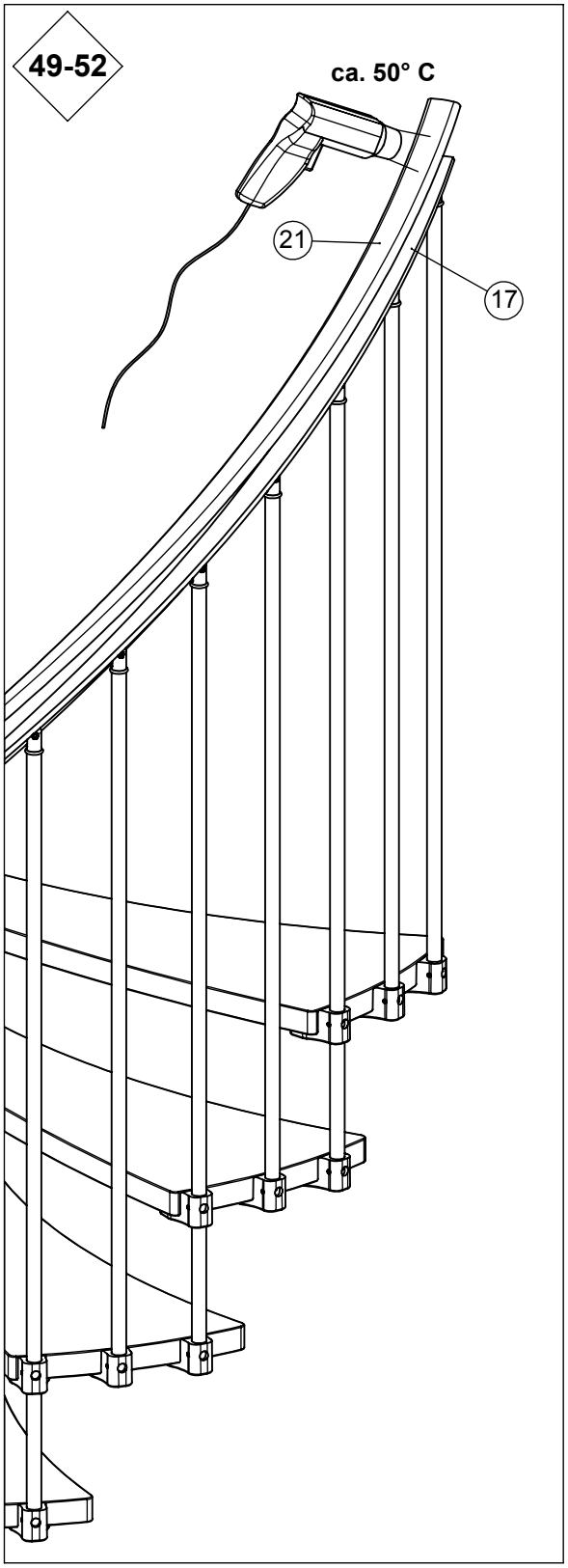
49-52
ca. 50° C
21
17

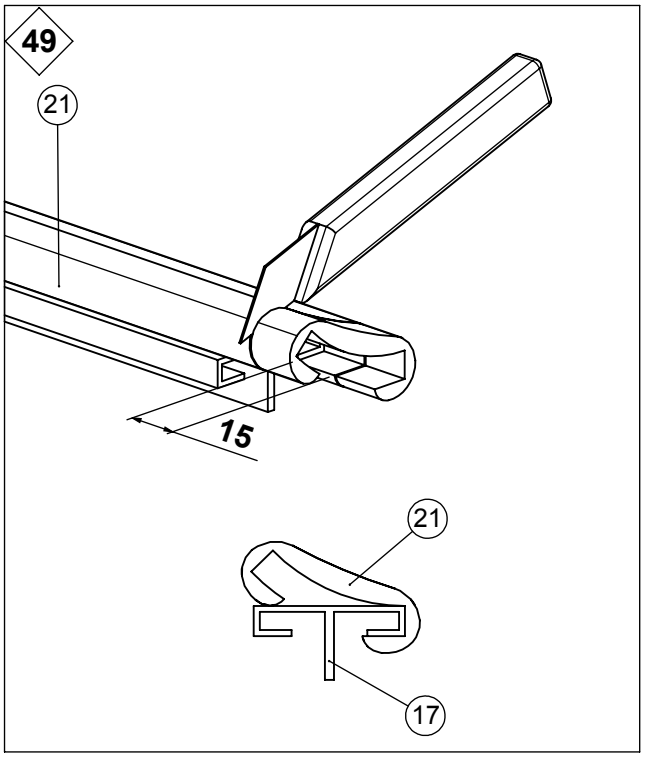
49
21
15
21
17

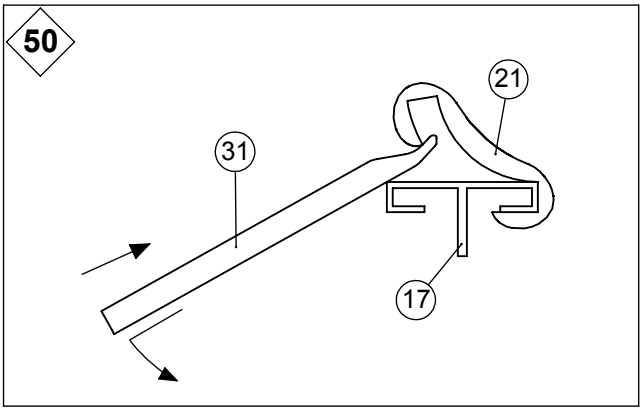
50
21
31
17

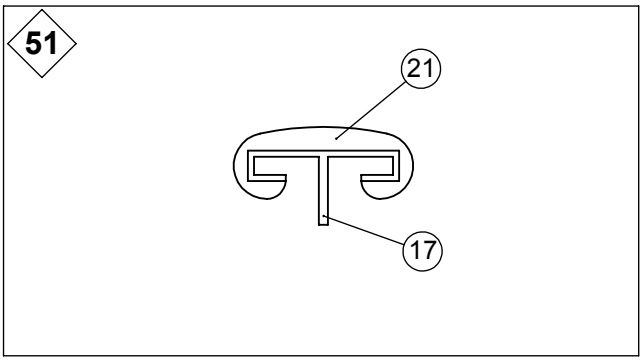
51
21
17

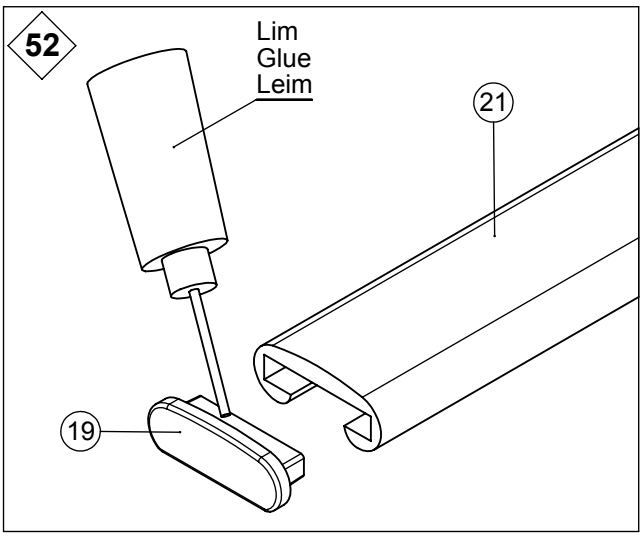
52
Lim
Glue
Leim
21
19

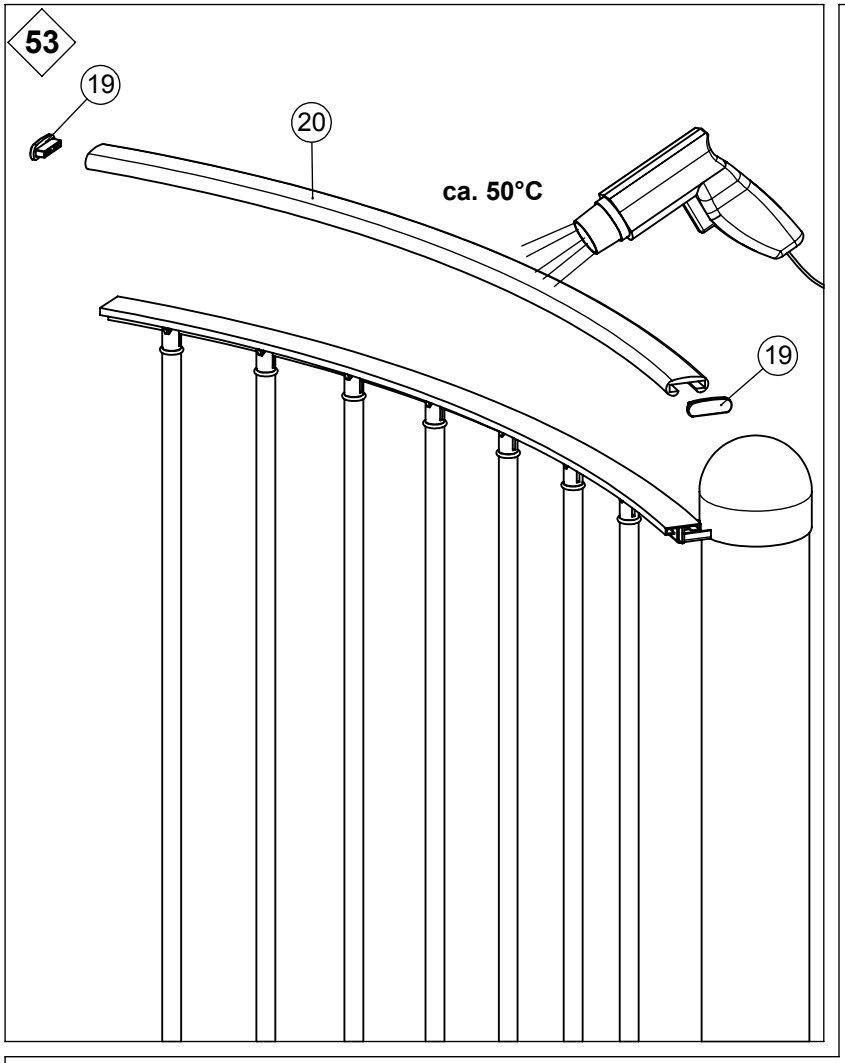
53
19
20
ca. 50°C
19

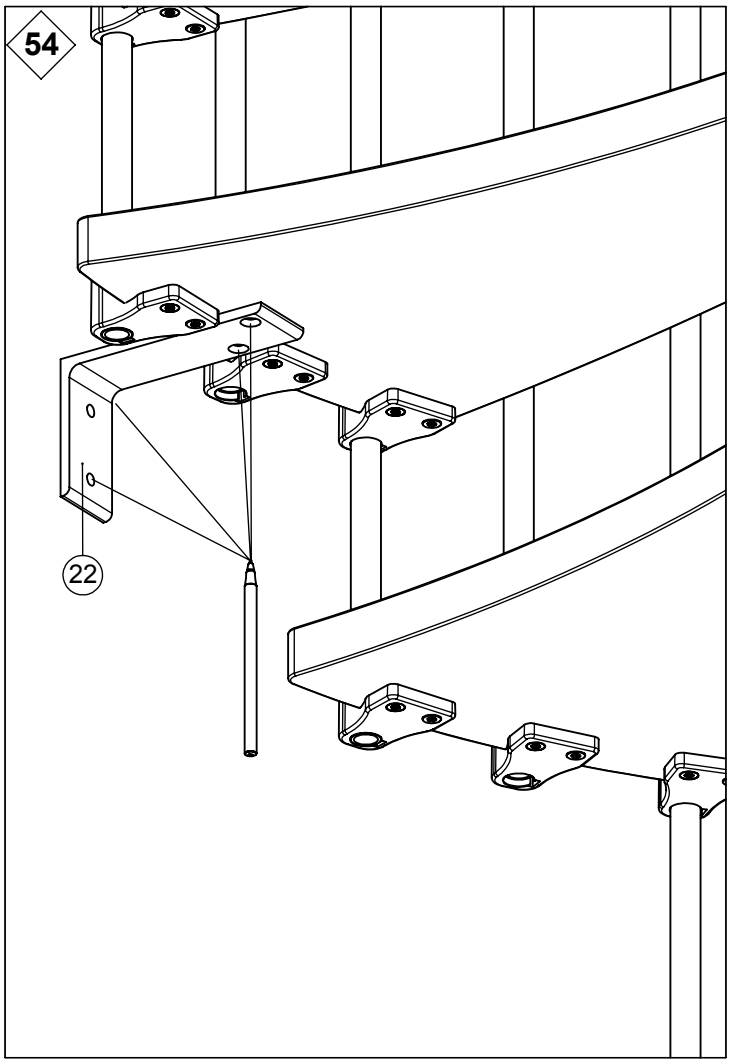
54
22

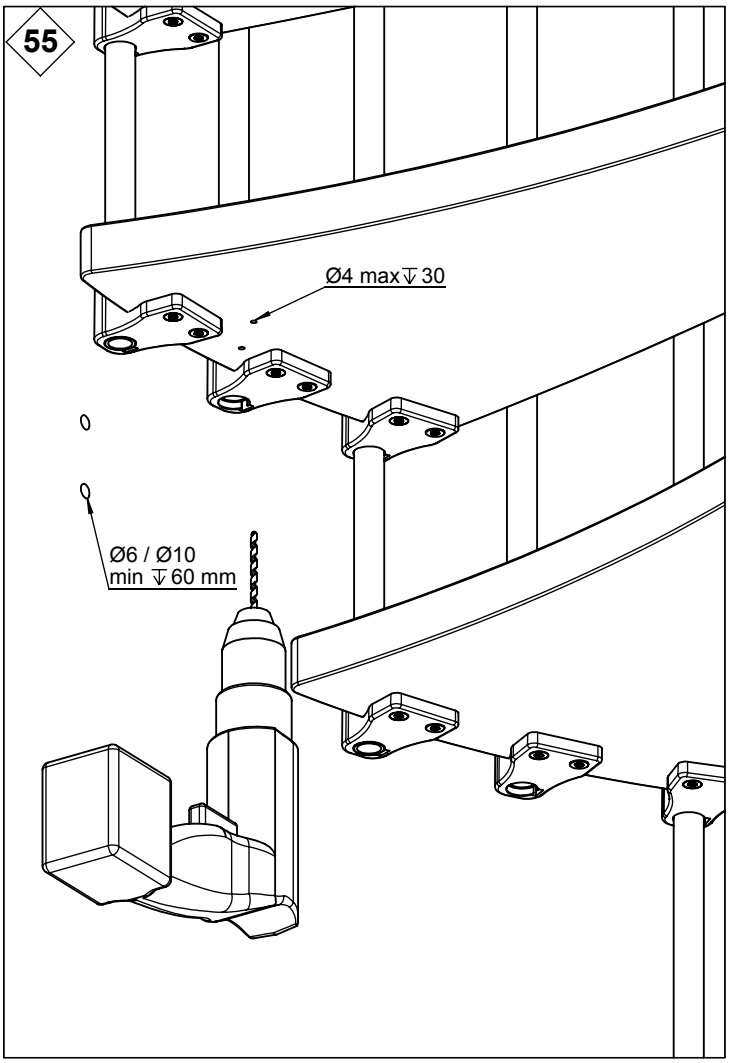
55
Ø4 max⇩30
Ø6 / Ø10
min ⇩60 mm

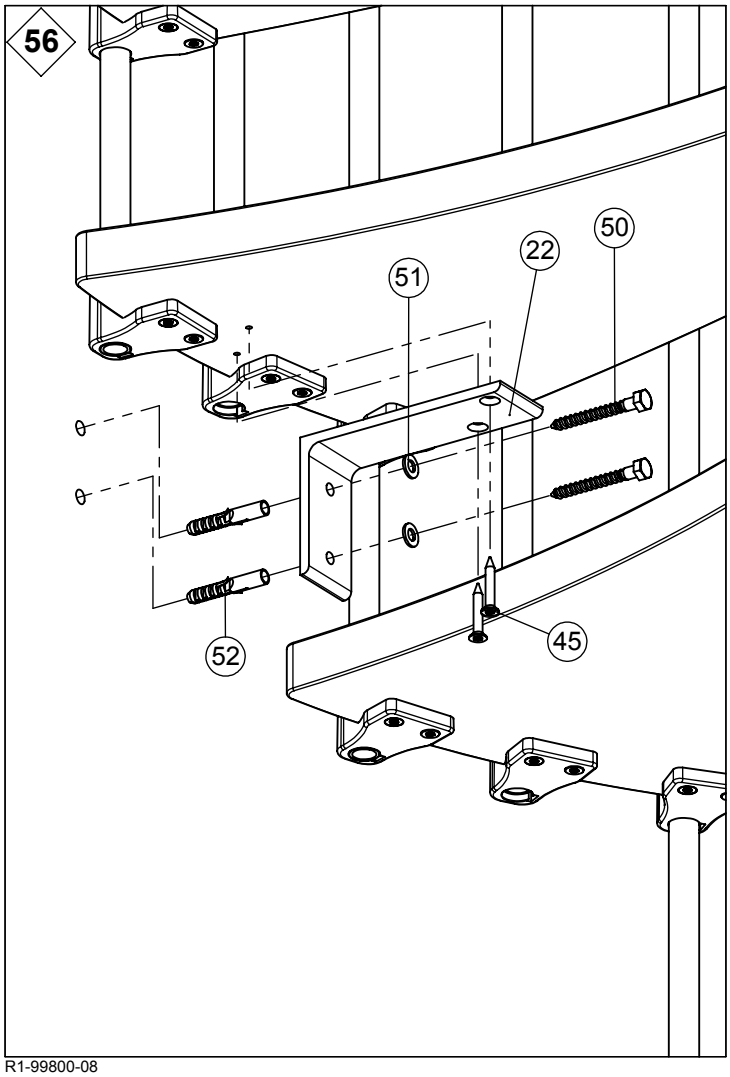
56
50
22
51
52
45

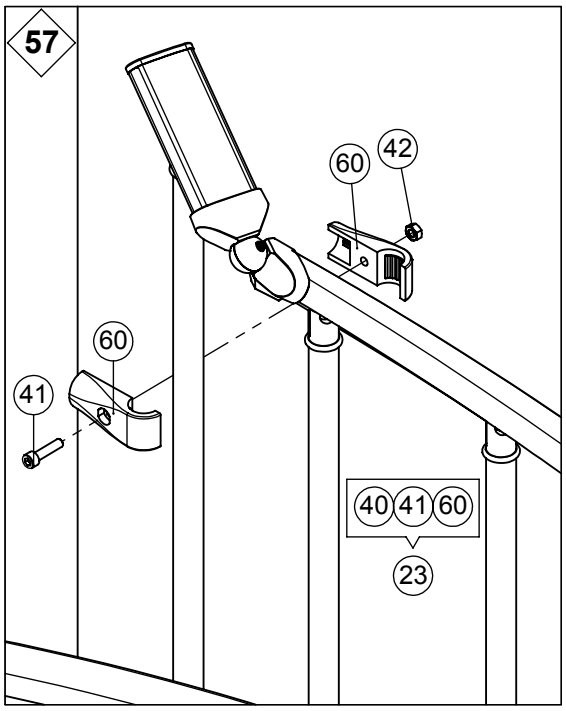

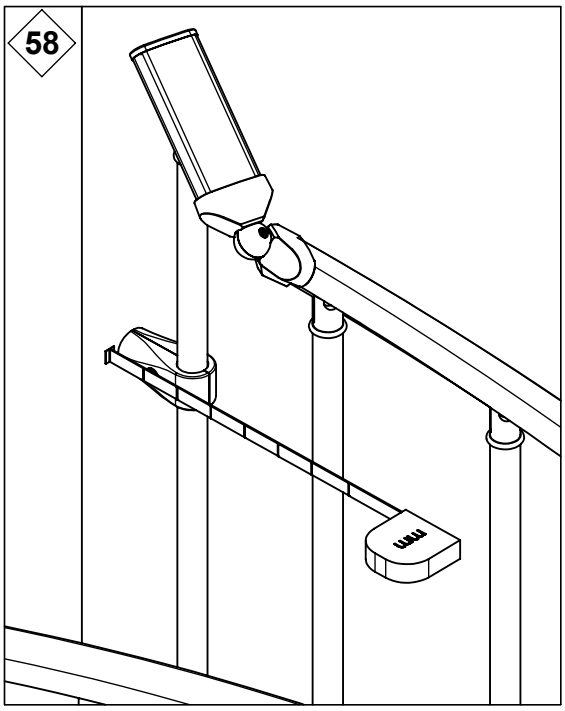

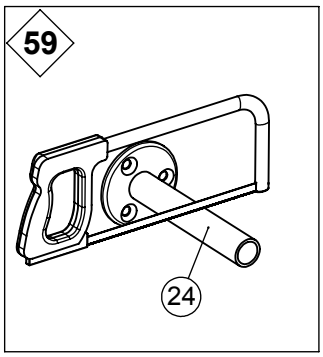

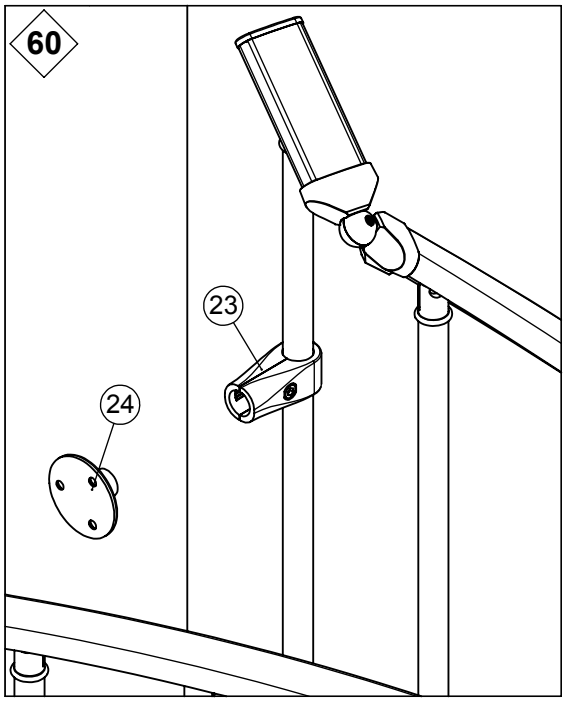

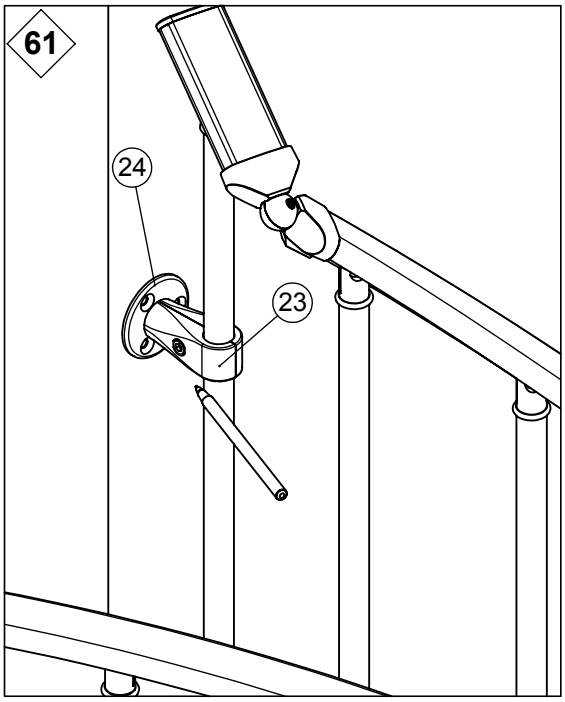

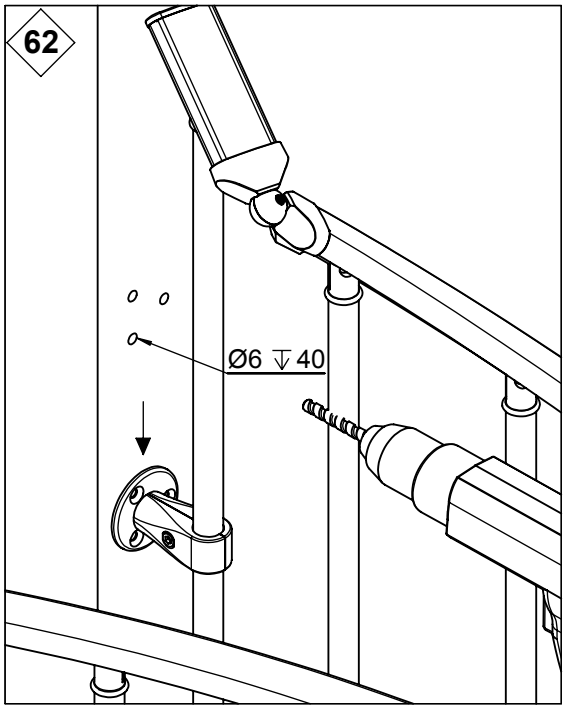

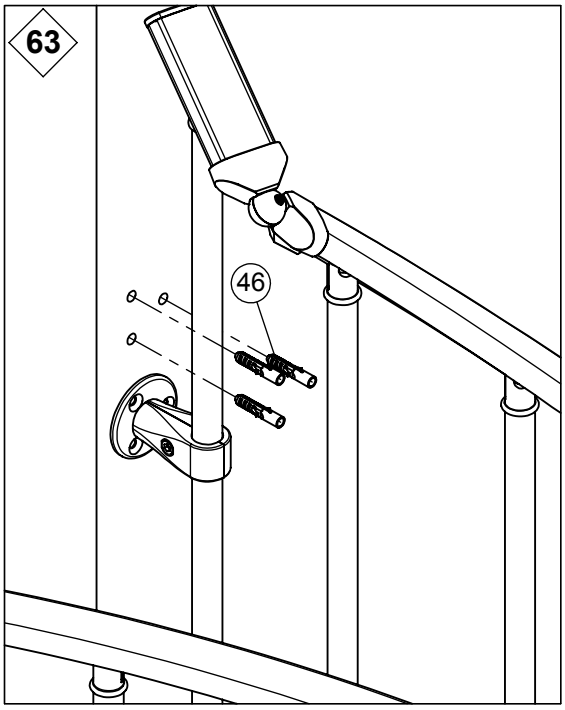

R1-99800-09

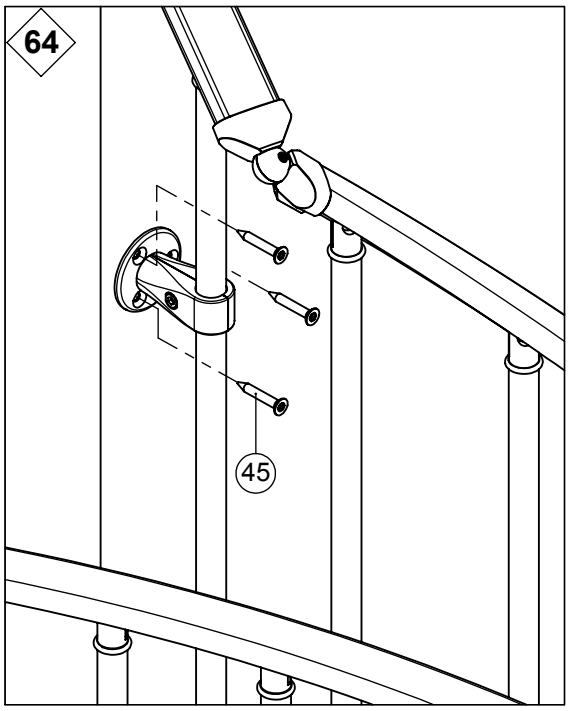
64
45

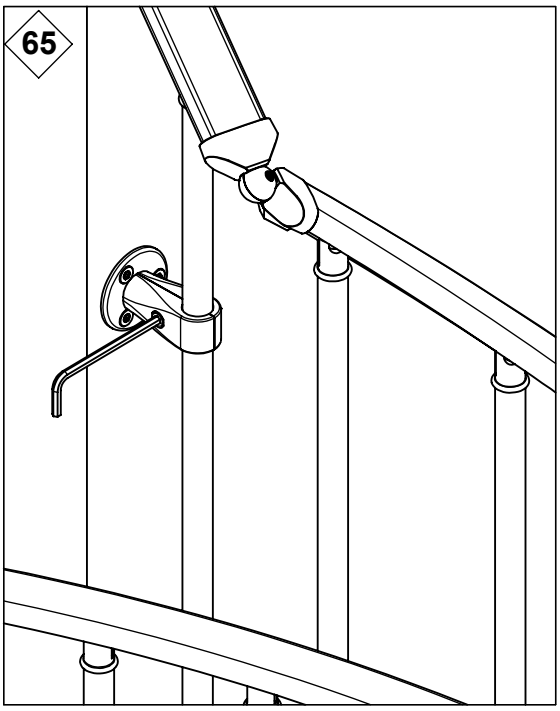
65

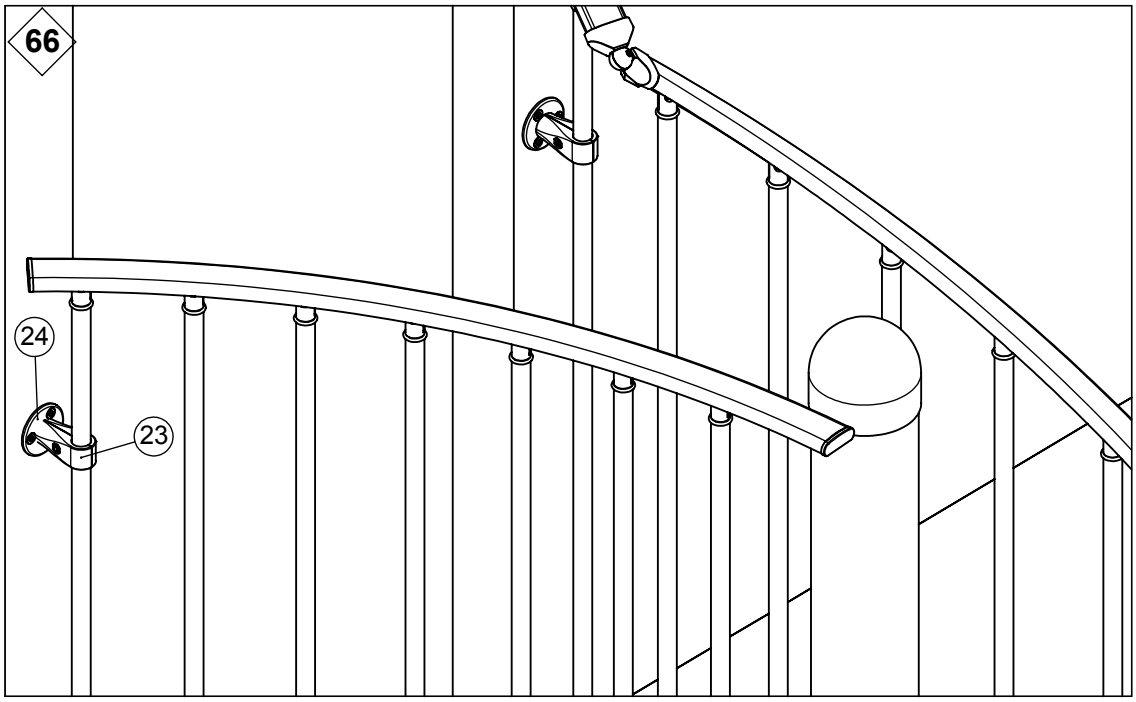
66
24
23